HORIZONTAL BORING MACHINE

DBC

110S · 110II · 130S/SL · 130II/LII · 160/L · 250II/LII

DN SOLUTIONS

DBC SERIES

The DBC series, ranging from compact to super-size models, satisfies customers' requirements with advanced technical prowess. A product line-up has been established for processing from middle to largest size parts including die / mold parts. We are improving productivity and creating values for our customers on the basis of our design improvements including enhanced operating convenience and efficiency.

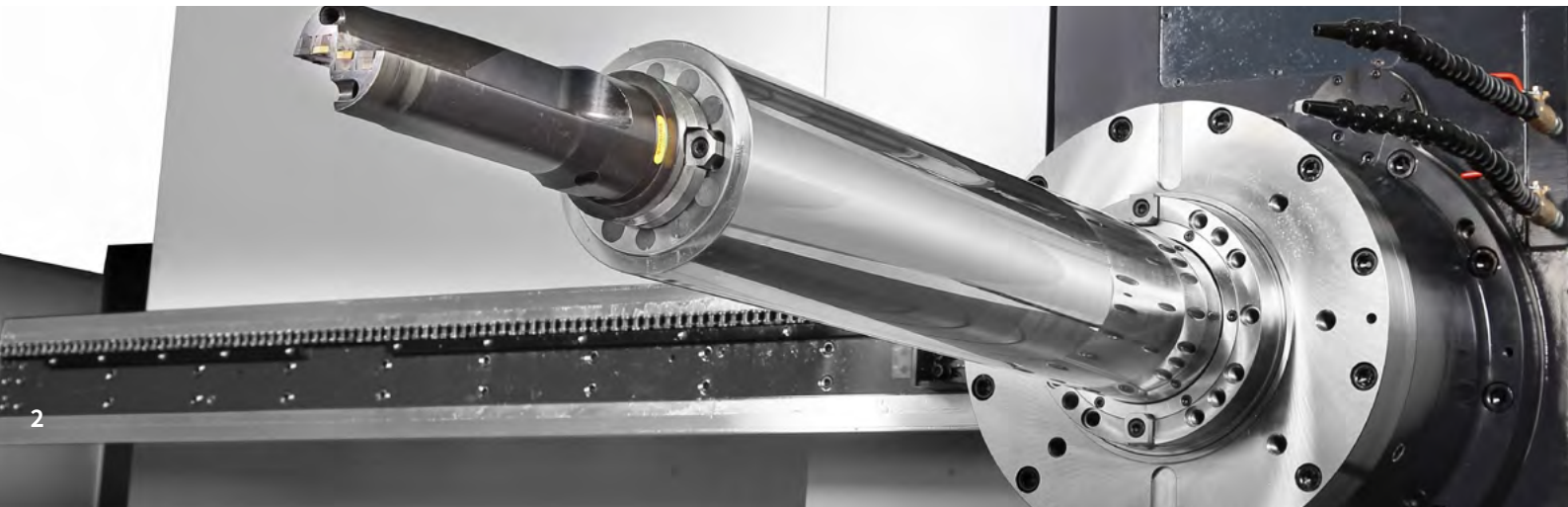

DIVERSIFIED LINE-UP FOR FASTER RESPONSE TO CUSTOMERS' REQUIREMENTS

The DBC Series offers a wide line-up from compact to large models, from heavy-duty type to high-speed processing type.

ENHANCED PERFORMANCE THROUGH HIGH-RIGIDITY & HIGH-PRECISION STRUCTURE

A high-rigidity and high-precision structure has been adopted to improve heavy-duty machining performance.

- The high-strength box guideway is applied based on a structural analysis design.
- B-axis rotary table equipped with high-precision encoder as a standard
- Securing stable characteristics of feed mechanism when machining high-load workpieces

INCREASED CONVENIENCE AND PRODUCTIVITY

The DBC series offers various options and customized control functions for maximum user convenience.

- Automatic tool changer (ATC)
- Automatic pallet changer (APC)
- Various head attachments
- EZ WORK function

DIVERSE LINE-UP

The DBC series provides a wide line-up of models covering compact, multi-functional, heavy loads and large workpieces.

Compact type_DBC S series

DBC 110S / 130S / 130SL

- Designed in compact size for small-medium size works
- Compact structure minimizes machine footprint

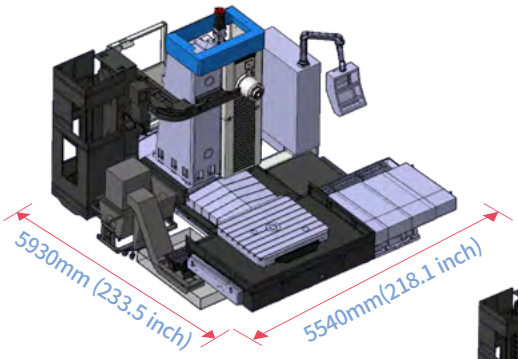

DBC 110S / 130S

DBC 130SL

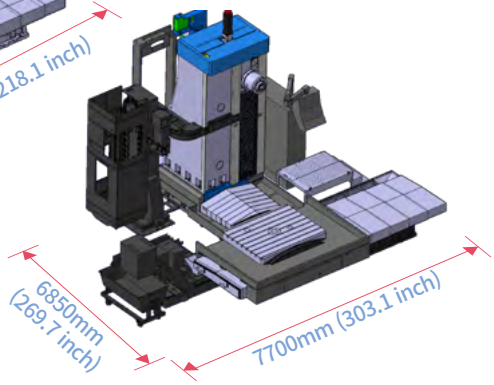

Multi-purpose (Standard)_ DBCⅡ series

DBC 110Ⅱ / 130(L)Ⅱ / 250(L)Ⅱ

- A standard machine that has been upgraded based on high-power and high-torque spindle for the machining of medium and large workpieces, and various machining support packages.
- Shortest delivery time by modular system design.

Spindle speed

4000/3000/6000 r/min

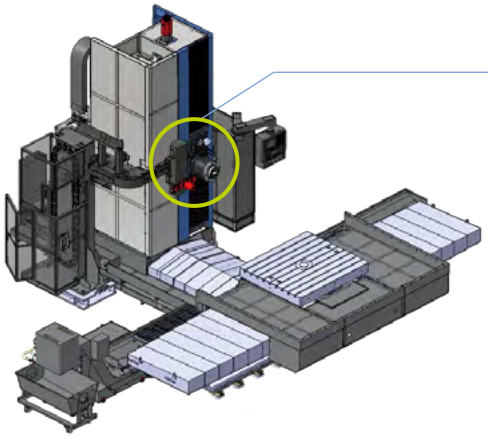

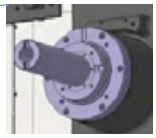

DBC 130Ⅱ
(Heavy Duty)

DBC 110Ⅱ
(High Productivity)

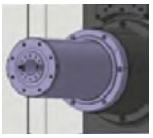

DBC 250Ⅱ
(High Speed)

Large workpieces

DBC 130LⅡ / 160 / 160L / 250LⅡ

- Suitable for machining large workpieces

Max. workpiece diameter
(without splash guard)

DBC 130Ⅱ/250Ⅱ

Ø3900 mm
153.5 inch

DBC 130LⅡ/160/160L/250LⅡ

Ø4800 mm
189.0 inch

Maximum machining area of workpiece

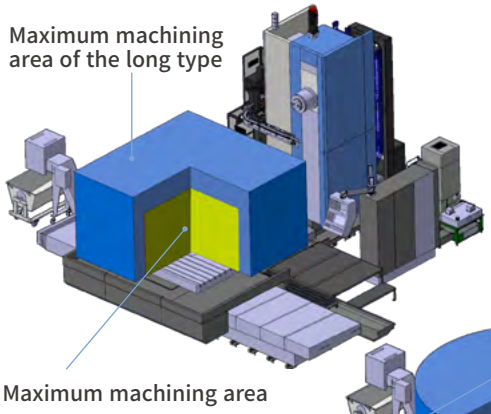

Max. workpiece diameter

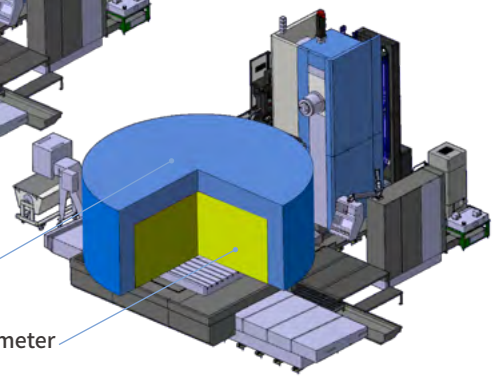

SPINDLE

Nose-type head structure allows easy access to the work piece and minimal protrusion of boring spindle enables stable cutting operation.

Stable cutting performance of highly-rigid spindle

Supported by highly-rigid bearings, the spindle is designed to bear very high axial working load. In addition, the spindles of the DBC Series have further reinforced rigidity providing improved cutting performance when the W-axis is in protruding position.

DBC S series

DBC S series DBC 110S / DBC 130S / DBC 130SL

Offer high-speed, high-power spindles to different boring sizes for higher productivity.

Model	Spindle Speed (r/min)	Boring spindle diameter mm (inch)	Quill diameter mm (inch)
DBC 110S	3000	110 (4.3)	-
DBC 130S DBC 130SL	2500	130 (5.1)	-

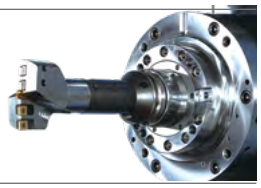

DBC II series

DBC 110II_ High-speed, high-performance spindle

Model	Spindle Speed (r/min)	Boring spindle diameter mm (inch)	Quill diameter mm (inch)
DBC 110II	4000	110 (4.3)	-

DBC 130II / LII_ High-power, high-torque spindle for heavy-duty machining

Model	Spindle Speed (r/min)	Boring spindle diameter mm (inch)	Quill diameter mm (inch)
DBC 130II / LII	3000	130 (5.1)	-

DBC 160 / L_ High-power, high-torque spindle for powerful cutting

Model	Spindle Speed (r/min)	Boring spindle diameter mm (inch)	Quill diameter mm (inch)
DBC 160 / L	2000	160 (6.3)	-

DBC 250II / LII_ High-speed, high-precision built-in Quill spindle

- Powerful Quill (Ø250mm) feed system (W-axis travel distance: 500 mm)
- Stable thermal error of the spindle over a long-term operation

Model	Spindle Speed (r/min)	Boring spindle diameter mm (inch)	Quill diameter mm (inch)
DBC250II / LII	6000	-	250 (9.8)

HIGHLY-RIGID STRUCTURE

For heavier workpieces and higher processing quality, the design has been improved with a cast structure offering excellent stiffness. The machine performance has been further upgraded by structural analysis of theinner rib structure.

Highly rigid design of major units

Rigidity is enhanced by optimal design of the machine structure. The highest accuracy can be achieved by minimizing deformation caused by heavy load.

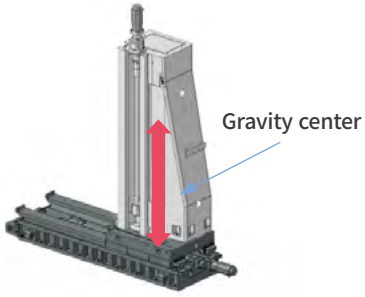

Low gravity center design to minimizevibration and column moving structure suitable for heavy load

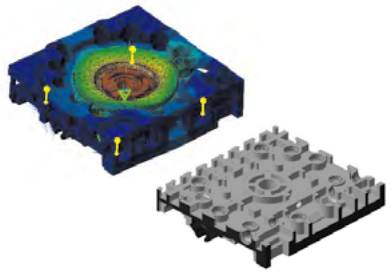

Deformation caused by heavy workpiece minimized with optimal design of table and table base

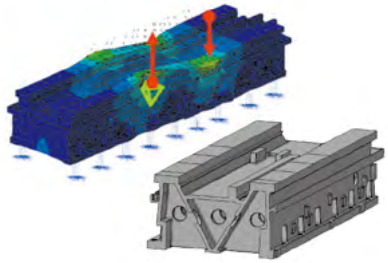

Deformation and vibration minimized by M-type ribs inside the bed.

Stable machine structure

A highly-rigid, stable machine structure has been realized by optimizing the design of the column and the bed. Excellent wear resistance and accuracy for machining quality have been achieved by precision grinding after heat treatment.

A leveling block is provided to strengthen anchoring force to the foundation, as well as enabling fast and easy installation.

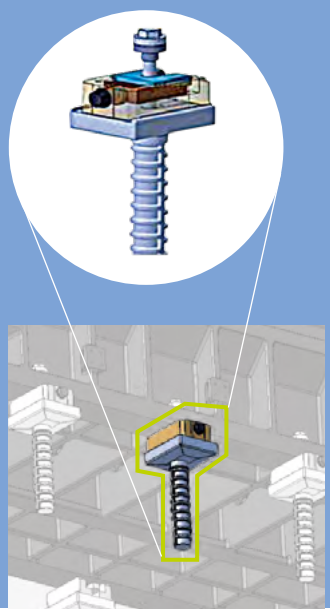

Narrow guide system

Designed with narrow guide system to minimize axis torque and ensure smooth motion.

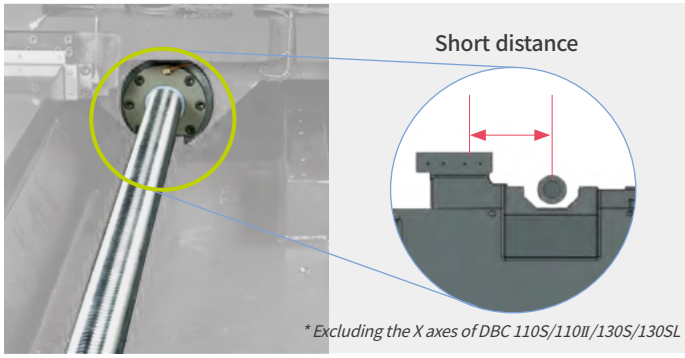

** Excluding the X axes of DBC 110S/110II/130S/130SL*

4-row angular ball bearings & Ball screw

Both ends of the shafts are supported by 4-row angular contact bearings. Low-noise, highly-precise ball screws are employed for axis travel.

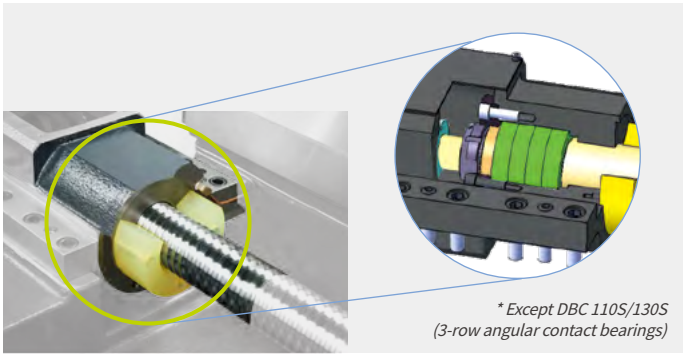

** Except DBC 110S/130S (3-row angular contact bearings)*

HIGH LOAD | HIGH ACCURACY

Upgraded with stable travel performance in heavy-duty machining by reducing servo load and increasing axial thrust.

Rotary table

A high-precision, separate type encoder is installed at the table center as a standard to realize precise rotation of the B-axis.

** Patented*

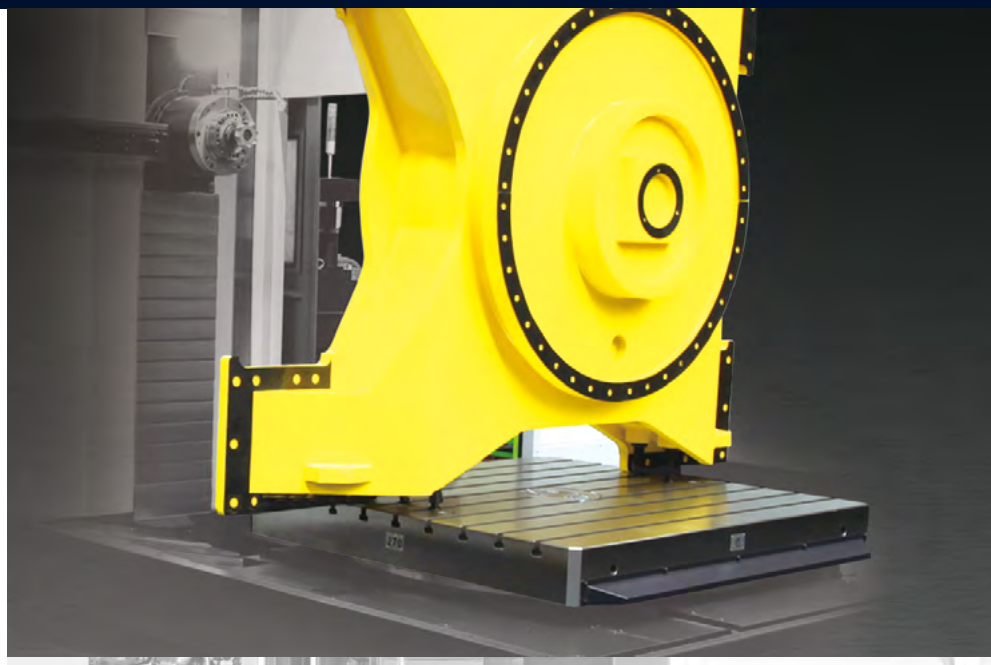

Locating pin for positioning by 90° steps

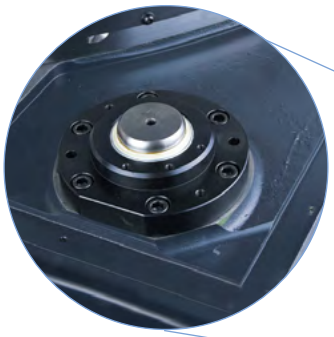

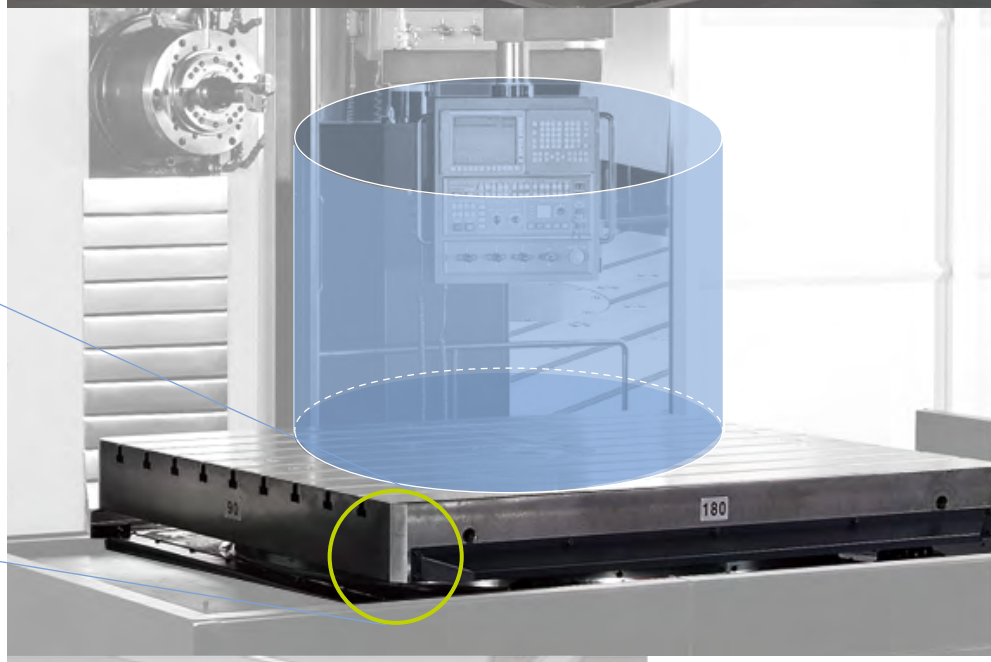

Gear reducer for axis shafts (X / Z)

- Servo load is reduced to secure stable feeding characteristics for heavy workpieces (X-axis).
- Axial thrust is increased to improve cutting capacity (Z-axis).

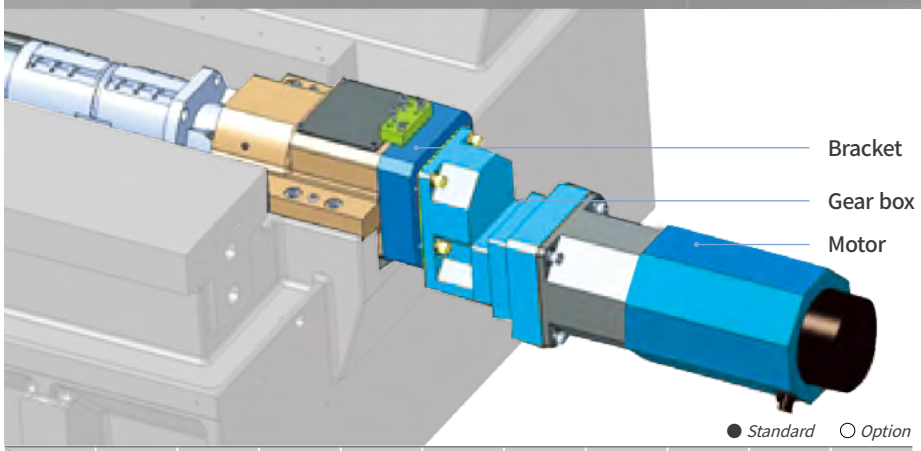

● *Standard* ○ *Option*

Model / Axis	DBC 110S	DBC 130S	DBC 130SL	DBC 110II	DBC 130II	DBC 130LII	DBC 160	DBC 160L	DBC 250II	DBC 250LII
X-axis	○	○	○	○	○	●	●	●	○	●
Z-axis	○	○	○	○	○	●	●	●	○	●

AUTO TOOL CHANGER (ATC) OPTION

The adoption of a servo-motor for tool magazine and carriage drive greatly reduces hydraulic system load of the entire machine. Machine has been improved by simplifying the structure to minimize the causes of failure.

Servo-driven auto tool changer

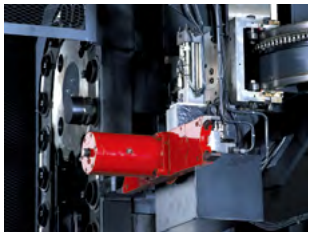
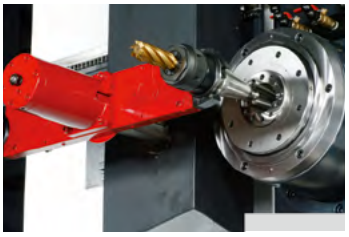

Auto tool changer (ATC)

Servo tool magazine

Servo carriage

Applicable tool specification

	Specification	Shape
Max. tool dia.	Normal tools: D = ø130 mm	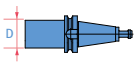
	Facing tools:D = ø250 mm (Neighboring pots must be empty)	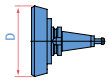
	Boring tools:D = ø400 mm (15.7 inch) (Neighboring pots must be empty) D = ø600 mm (23.6 inch) OPTION (Neighboring pots must be empty)	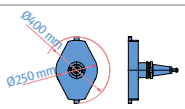

Max. allowable moment: 34 N·m (25.1 ft-lbs)
** Please contact us if you wish to extend the boring tool diameter (D=ø600).*

	Specification	Shape
Max. tool length	L = 600 mm	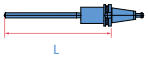
Max. tool weight	W = 30 kg	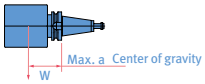
Tool storage capacity	40 {60 / 90 / 120} tools OPTION	

AUTOMATIC PALLET CHANGER (APC) OPTION

While the machine tool is cutting a workpiece, the workpiece to be processed next is set up on the standby pallet which can replace the current pallet automatically at the end of cutting to raise productivity.

DBC 130II with APC
3D modeling layout

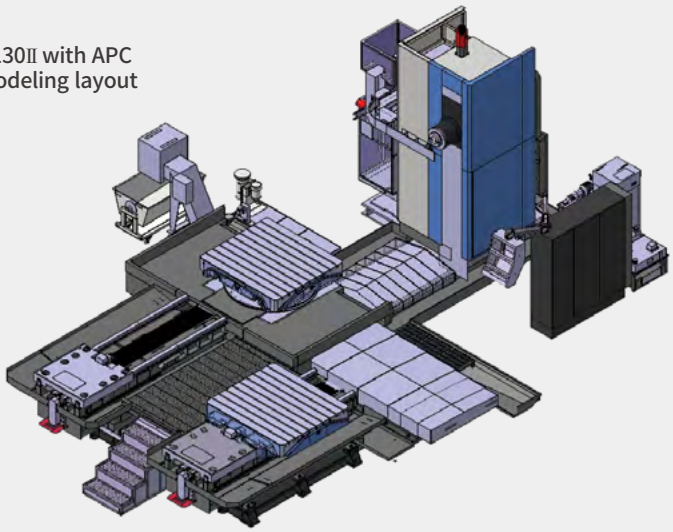

Detailed specification of APC

Details	Unit	Specification
No. of pallets	ea	2
APC type	-	Parallel shuttle (in Z-axis direction)
Pallet size (W x L) & work load	mm (inch) & ton	• 1600 x 1800 & 10 (23.6 x 63.0 & 10) • 1800 x 2000 & 8 (70.9 x 78.7 & 8)

Note 1) The above specification is for reference to understand the APC option of DBC 130 II.
Note 2) Please contact us for further details of the specifications. The specifications are subject to change without prior notice for performance improvement

STANDARD | OPTIONAL SPECIFICATIONS

DBC S series

Description	Features	DBC 110S	DBC 130S	DBC 130SL
SPINDLE MOTOR POWER	26 / 22 KW (34.9 /29.5 Hp) (30WORKPIECE SETTING DEVICE)	●	X	X
	30 / 22 KW (40.2 /29.5 Hp) (15WORKPIECE SETTING DEVICE) (AMP UP)	○	X	X
	45 / 37 KW (60.3 /49.6 Hp) (30WORKPIECE SETTING DEVICE)	X	X	X
	37 / 30 KW(49.6 /40.2 Hp) (30WORKPIECE SETTING DEVICE)	X	●	●
ATC	40 TOOLS	○	○	○
	60 / 90 / 120 TOOLS	○	○	○
WORKPIECE SETTING DEVICE	CENTER BUSH	X	X	X
	EDGE LOCATOR	○	○	○
TABLE SIZE	1400 X 1600 mm(55.1X63.0 inch)	●	●	X
	1400 X 1800 mm(55.1X70.9 inch)	X	X	●
	1600 X 1800 mm(63.0X70.9 inch)	X	X	X
	1800 X 2000 mm(70.9X78.7 inch)	X	X	X
	2000 X 2200 mm(78.7X86.6 inch)	X	X	X
	1800 X 2000 mm(70.9X78.7 inch)_20 ton	X	X	X
	2000 X 2200 mm(78.7X86.6 inch)_19 ton	X	X	X
	1600 X 3000 mm(63.0X118.1 inch)_20 ton	X	X	X
APC (1)		○	○	○
LINEAR SCALE (X / Y / Z)	ABSOLUTE	○	○	○
RAISED COLUMN (1)		○	○	○
SPLASH GUARD	SPLASH GUARD W/O TOP	○	○	○
	AUTO DOOR SEMI GUARD (1) (2)	○	○	○
COOLANT TANK		○	○	○
LIFT UP CHIP CONVEYOR		○	○	○
Flood Coolant	1.1KW_0.7MPA_30 L/MIN	○	○	○
	1.1KW_1.0MPA_20 L/MIN	○	○	○
TSC	1.5 KW_2.0 MPA_CYCLONE FILTER	○	○	○
	4.0 KW_2.0 MPA_CYCLONE FILTER	○	○	○
	2.9KW_3.0MPA CYCLONE FILTER	○	○	○
	7.5 KW_7.0 MPA_CYCLONE FILTER	○	○	○
OIL SKIMMER	BELT TYPE	○	○	○
	DISK TYPE	○	○	○
COOLANT GUN		○	○	○
Coolant level switch		○	○	○
AIR GUN		○	○	○
AIR BLOWER		○	○	○
6-AXIS OPTION (1)	1 AXIS_WIRE AND PIPING_HYD	○	○	○
AUTO WORKPIECE MEASURING DEVICE	OMP60_RENISHAW	○	○	○
	RMP60_RENISHAW	○	○	○
	RMP600_RENISHAW	○	○	○
MASTER TOOL FOR AUTO TOOL MEASUREMENT	CALIBRATION BLOCK	○	○	○
AUTO TOOL MEASURING DEVICE	TS27R_RENISHAW	○	○	○
ANGULAR FIXTURE	SIZE 450 X 600 X 400	○	○	○
	SIZE 500 X 1000 X 550	○	○	○
	SIZE 750 X 1250 X 750	○	○	○
	SIZE 1000 X 2000 X 1000	○	○	○
ATTACHMENT	90° ANGLE HEAD_L420 / L650	○	○	○
	FACE PLATE_Ø650	○	○	○
	INDEXABLE ANGLE HEAD_90° AUTO INDEX	○	○	○
	MANUAL UNIVERSAL HEAD_1000	○	○	○
	SPINDLE SUPPORT_310 MM	X	○	○
	SPINDLE SUPPORT_200 MM	○	X	X
	COGSDILL READY	○	○	○
ATTACHMENT SPEED LIMIT CONTROL		●	●	●
SAFETY FENCE AND INTERLOCK SWITCH		○	○	○
SPINDLE THERMAL COMPENSATION SYSTEM		●	●	●
TEST BAR	BT50	○	○	○
Y-AXIS ADDITIONAL BRAKE SYSTEM (1)		○	○	○
MDI / DISPLAY unit	15" Color LCD with Touch Panel	●	●	●
TRANSFORMER		○	○	○
POWER PANEL AIR CONDITIONER		○	○	○
POWER PANEL LIGHT		○	○	○
POWER PANEL LINE FILTER		○	○	○
AUTO NC POWER OFF		○	○	○
AUTO NC POWER ON		○	○	○
MACHINE WARMING UP		○	○	○
DN Solutions TOOL MANAGEMENT		○	○	○
DN Solutions TOOL LOAD MONITORING		○	○	○
MPG	1 MPG_PORTABLE_W/ENABLE TYPE	●	●	●
	3 MPG_PORTABLE_W/ENABLE TYPE	○	○	○
ALARM GUIDANCE		○	○	○
COUNTER FUNCTION	WORK/TOTAL/DAILY	○	○	○
NC		32iB PLUS	0iMF PLUS	31iB PLUS
AICC II 200 BLOCK		X	●	X
AICC II 400 BLOCK		X	O	X
AICC II 600 BLOCK		●	X	X
AICC II 1000 BLOCK		X	X	●

** Please contact DN Solutions to select detailed steady rest specifications * Note 1) Please contact us for further details*
** Note 2) This specification applies to APC option. * Note 3) 30 min/continuous For DBC 250(L) ** Special Quotation.*

● *Standard* ○ *Optional* X *Not applicable*

Fire Safety Precautions | There is a high risk of fire when using non-water-soluble cutting fluids, processing flammable materials, neglecting the controlled and careful use of coolants and modifying the machine without the consent of the manufacturer. Always check the SAFETY GUIDELINES carefully before using the machine.

STANDARD | OPTIONAL SPECIFICATIONS

DBC II series

Description	Features	DBC 110II	DBC 130II	DBC 130LII	DBC 160	DBC 160L	DBC250II	DBC 250LII
SPINDLE MOTOR POWER	26 / 22 KW(34.9 /29.5 Hp) (30min/continuous)	●	●	●	X	X	X	X
	30 / 22 KW(34.9 /29.5 Hp) (15min/continuous) (AMP UP)	○	○	○	X	X	●(3)	●(3)
	45 / 37 KW(34.9 /29.5 Hp) (30min/continuous)	○	○	○	●	●	X	X
	37 / 30 KW(34.9 /29.5 Hp) (30min/continuous)	X	X	X	X	X	X	X
ATC	40 TOOLS	○	○	○	○	○	○	○
	60 / 90 / 120 TOOLS	○	○	○	○	○	○	○
WORKPIECE SETTING DEVICE	CENTER BUSH	X	○	○	○	○	○	○
	EDGE LOCATOR	○	○	○	○	○	○	○
TABLE SIZE	1400 X 1600 mm (55.1X63.0 inch)	X	X	X	X	X	X	X
	1400 X 1800 mm (55.1X70.9 inch)	●	X	X	X	X	X	X
	1600 X 1800 mm (63.0X70.9 inch)	X	●	●	X	X	●	●
	1800 X 2000 mm (70.9X78.7 inch)	X	○	○	X	X	○	○
	2000 X 2200 mm (78.7X86.6 inch)	X	○	○	X	X	○	○
	1800 X 2000 mm (70.9X78.7 inch)_20 ton	X	X	○	X	X	X	X
	2000 X 2200 mm (78.7X86.6 inch)_19 ton	X	X	○	X	X	X	X
	2000 X 2200 mm (78.7X86.6 inch)_20 ton	X	X	X	●	●	X	X
	2000 X 2200 mm (78.7X86.6 inch)_25 ton	X	X	X	○	X	X	X
APC (1)		○	○	○	○	○	○	○
LINEAR SCALE (X, Y, Z-AXIS)	ABSOLUTE	○	○	○	●	●	●	●
RAISED COLUMN (1)		○	○	○	○	○	○	○
SPLASH GUARD	SPLASH GUARD W/O TOP	○	○	○	○	○	○	○
	AUTO DOOR SEMI GUARD (1) (2)	○	○	○	○	○	○	○
COOLANT TANK		○	○	○	○	○	○	○
LIFT-UP CHIP CONVEYOR		○	○	○	○	○	○	○
Flood Coolant	1.1KW_0.7MPA_30 L/MIN	○	○	○	○	○	○	○
	1.1KW_1.0MPA_20 L/MIN	○	○	○	○	○	○	○
TSC	1.5 KW_2.0 MPA_CYCLONE FILTER	○	○	○	○	○	○	○
	4.0 KW_2.0 MPA_CYCLONE FILTER	○	○	○	○	○	○	○
	2.9KW_3.0MPA CYCLONE FILTER	○	○	○	○	○	○	○
	7.5 KW_7.0 MPA_CYCLONE FILTER	○	○	○	○	○	○	○
OIL SKIMMER	BELT TYPE	○	○	○	○	○	○	○
	DISK TYPE	○	○	○	○	○	○	○
COOLANT GUN		○	○	○	○	○	○	○
Coolant level switch		○	○	○	○	○	○	○
AIR GUN		○	○	○	○	○	○	○
AIR BLOWER		●	○	○	○	○	●	●
6-AXIS OPTION (1)	1 AXIS_WIRE AND PIPING_HYD	○	○	○	○	○	○	○
AUTO WORK MEASURING DEVICE	OMP60_RENISHAW	○	○	○	○	○	○	○
	RMP60_RENISHAW	○	○	○	○	○	○	○
	RMP600_RENISHAW	○	○	○	○	○	○	○
MASTER TOOL FOR AUTO TOOL MEASUREMENT	CALIBRATION BLOCK	○	○	○	○	○	○	○
AUTO TOOL MEASURING DEVICE	TS27R_RENISHAW	○	○	○	○	○	○	○
ANGULAR FIXTURE	SIZE 450 X 600 X 400	○	○	○	○	○	○	○
	SIZE 500 X 1000 X 550	○	○	○	○	○	○	○
	SIZE 750 X 1250 X 750	○	○	○	○	○	○	○
	SIZE 1000 X 2000 X 1000	○	○	○	○	○	○	○
ATTACHMENT	90˚ ANGLE HEAD_L420 / L650	○	○	○	○	○	X	X
	FACE PLATE_Ø650	○	○	○	○	○	X	X
	INDEXABLE ANGLE HEAD_90° AUTO INDEX	○	○	○	○	○	X	X
	MANUAL UNIVERSAL HEAD_1000	○	○	○	○	○	X	X
	SPINDLE SUPPORT_370 MM	X	X	X	○	○	X	X
	SPINDLE SUPPORT_310 MM	X	○	○	X	X	X	X
	SPINDLE SUPPORT_200 MM	○	X	X	X	X	X	X
	COGSDILL READY	○	○	○	○	○	X	X
ATTACHMENT SPEED LIMIT CONTROL		●	●	●	●	●	●	●
SAFETY FENCE AND INTERLOCK SWITCH		○	○	○	○	○	○	○
SPINDLE THERMAL COMPENSATION SYSTEM		●	●	●	●	●	X	X
TEST BAR	BT50	○	○	○	○	○	○	○
Y-AXIS ADDITIONAL BRAKE SYSTEM (1)		○	○	○	○	○	○	○
MDI / DISPLAY UNIT	15" Color LCD with Touch Panel	●	●	●	●	●	●	●
TRANSFORMER		○	○	○	●	●	○	○
POWER PANEL AIR CONDITIONERPOWER PANEL AIR CONDITIONER		○	○	○	○	○	○	○
POWER PANEL LIGHT		○	○	○	○	○	○	○
POWER PANEL LINE FILTER		○	○	○	○	○	○	○
AUTO NC POWER OFF		○	○	○	○	○	○	○
AUTO NC POWER ON		○	○	○	○	○	○	○
MACHINE WARMING UP		○	○	○	○	○	○	○
DN Solutions TOOL MANAGEMENT		○	○	○	○	○	○	○
DN Solutions TOOL LOAD MONITORING		○	○	○	○	○	○	○
MPG	1 MPG_PORTABLE_W/ENABLE TYPE	●	●	●	●	●	●	●
	3 MPG_PORTABLE_W/ENABLE TYPE	○	○	○	○	○	○	○
ALARM GUIDANCE		○	○	○	○	○	○	○
COUNTER FUNCTION	WORK/TOTAL/DAILY	○	○	○	○	○	○	○
NC		31iB PLUS	31iB PLUS	31iB PLUS	31iB PLUS	31iB PLUS	31iB PLUS	31iB PLUS
AICC II 200 BLOCK		X	X	X	X	X	X	X
AICC II 400 BLOCK		X	X	X	X	X	X	X
AICC II 600 BLOCK		X	X	X	X	X	X	X
AICC II 1000 BLOCK		●	●	●	●	●	●	●

● *Standard* ○ *Optional* X *Not applicable*

** Please contact DN Solutions to select detailed steady rest specifications * Note 1) Please contact us for further details*
** Note 2) This specification applies to APC option. * Note 3) 30 min/continuous For DBC 250(L) ** Special Quotation.*
** When using a semi-synthetic type or synthetic type, contact our sales representative or service center in advance.*

⚠ Fire Safety Precautions | There is a high risk of fire when using non-water-soluble cutting fluids, processing flammable materials, neglecting the controlled and careful use of coolants and modifying the machine without the consent of the manufacturer. Always check the SAFETY GUIDELINES carefully before using the machine.

CHIP DISPOSAL SYSTEM

Proper chip disposal is very important for productivity and environment protection. The DBC series provides various chip disposal systems designed to improve productivity and the working environment.

Easy chip removal structure

The DBC series confines chips and coolant to the chip pan to make the chip disposal using the chip conveyer easier.

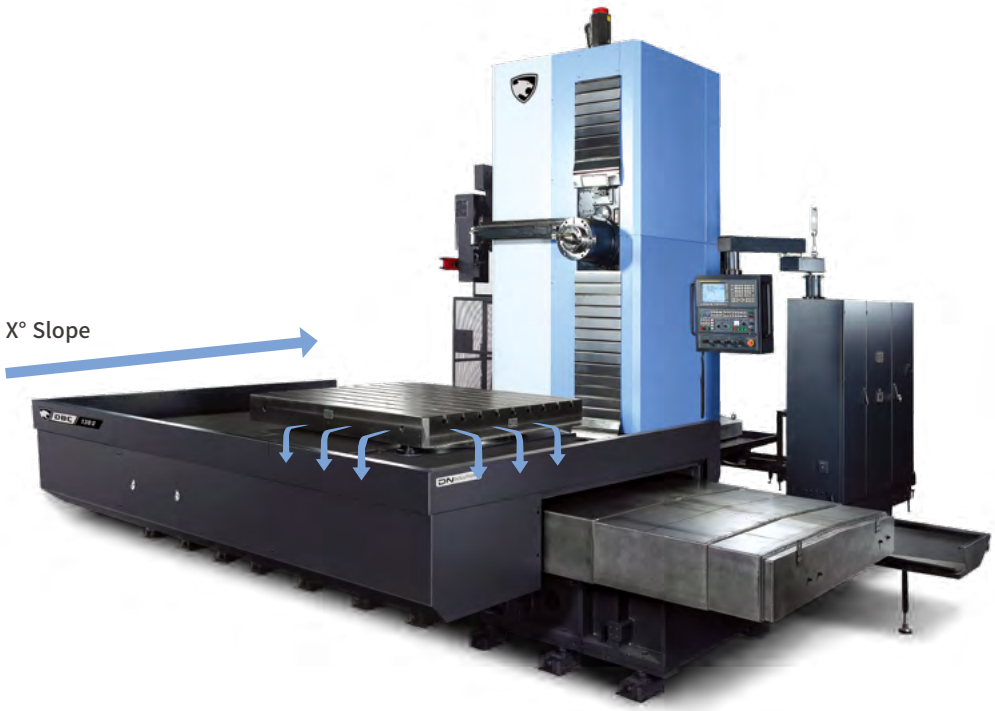

Coolant gun OPTION

Chip pan

Slope-type chip pan is used for smooth coolant drain and chip disposal.

Built-in, hinge-type belt chip conveyor

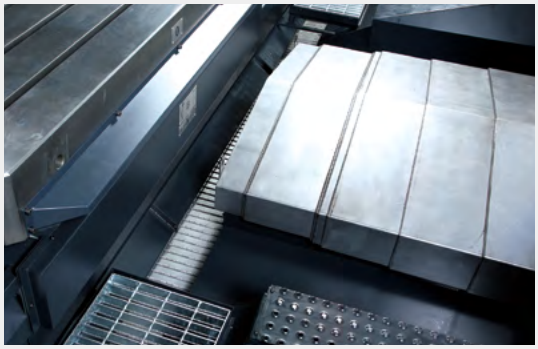

Lift-up chip convey OPTION

CHIP DISPOSAL SYSTEM

Coolant splash guard OPTION

Semi-splash guard

DBC 110S / 130S

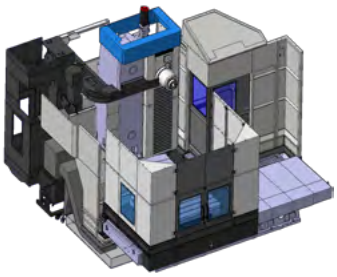

DBC 110II / 130SL

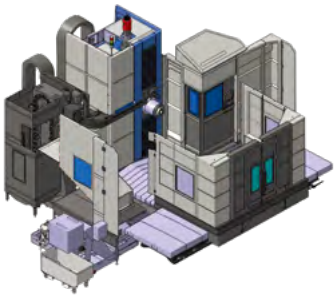

DBC 130II / 130LII / 250II / 250LII

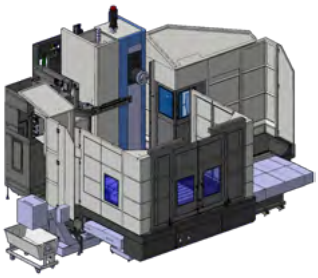

DBC 160

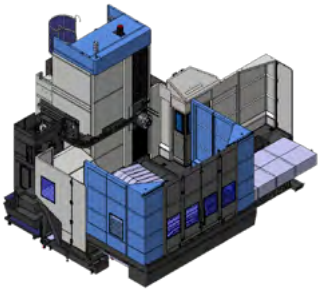

Auto door semi-splash guard
(for APC option)

DBC 130II / 130LII / 250II / 250LII

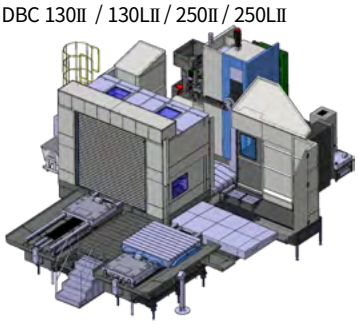

Semi-splash guard with top

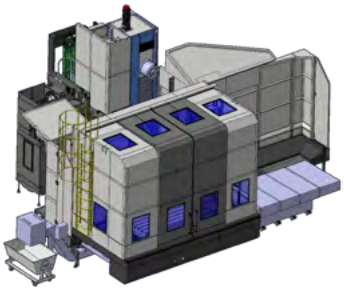

Full -splash guard

DBC 130II / DBC 250II

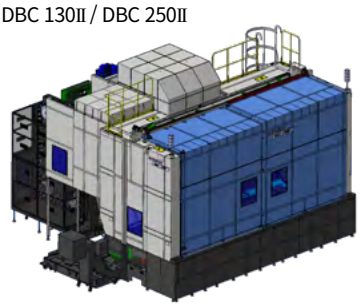

** Users are recommended to select the cover (splash guard) option to protect the operator from splashing coolant in the work area. Customers who do not purchase a splash guard should prepare a separate protective measure.*
** This layout is be used as reference data for the better understanding. It is subject to change without notice for performance improvement. Therefore, separately consult with DN Solutions' technical team for the detailed layout.*

Special options OPTION

Special option can be available. please ask to sales person for detail.

1) Additional discussion is required when ATC need while spindle support is attached.
(Note) The head attachments (1 ~ 10) are not applicable for DBC 250 (L) II model.

1. Angle head
(manual indexing)
(L=420mm(16.5 inch), 1500r/min[1])

2.Long type angle head
(manual indexing)
(L=650mm (25.6 inch), 1500r/min)[1]

3.Universal head
(manual indexing)

4. Face plate
(manual indexing)
(Ø650mm (25.6 inch))

5. Indexable angle head
(90° auto indexing)
Please contact us for further details of specification.

6. Spindle support[2]

- DBC 110S / 110 II : L =200mm (7.9 inch)
- DBC 130S / SL : L = 310mm (12.2 inch)
- DBC 130II / L : L= 310mm (12.2 inch)
- DBC 160 / L : L=370mm (14.6 inch)

7. Facing head
(Cogsdill, ITS)

- with U-axis preparation
- manual tool change
- manual installation

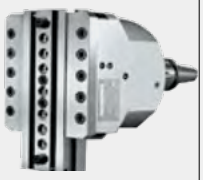

8. Facing head TA-Center (D'andrea)

- with U-axis preparation
- ATC change

9. Facing head U-Tronic
(D'andrea)

- with U-axis preparation
- manual tool change
- manual installation

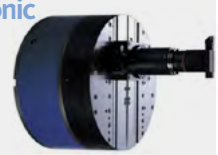

10. AAC (Auto Attachment Change)

Auto attachment change
for facing head

11. 120 Tools ATC

Tool storage 120 ea

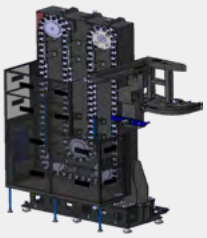

12. Angle plate (4 types)

- Please contact us for customized specifications.
- Please contact us for further information.

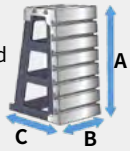

Unit : mm (inch)

A	600(23.6)	1000 39.4)	1250(49.2)	2000(78.7)
B	450(17.7)	500(19.7)	750(29.5)	1000(39.4)
C	400(15.7)	550(21.7)	750(29.5)	1000(39.4)

EASY AND CONVENIENT OPERATION

Operating system for enhanced user convenience

DN Solutions's new operation panel

With differentiated hotkey, the DBC Series enables fast access to frequently used functions.

Improved user convenience with ergonomic design

The tilting operation panel ensures enhanced operating convenience.

Conventional type

Improved type

Productivity improved by adoption of operator panel design optimized for the operation of large machines

- Mono lever jog switches are provided at the bottom of the main operation panel for easy traverse on the long axis of large machines (standard).
- Pulse handle for the operator's convenience and portable MPG for easy workpiece setting are provided as standard features.

Portable MPG

ATC OP panel

3 Portable MPG

OPTION

MPG with LCD display

OPTION

Manual operation panel

OPTION

HMOP (Handy Machine Operator's Panel)

Mono lever jog switch

EZ WORK

The software developed by DN Solutions's own technology provides numerous functions designed for convenient operation.

Variable work load control ®

When the operator enters the M-code for the weight of the workpiece, the system automatically determines the table feed pattern to perform cutting.

Work load control	DBC 110S	DBC 130S / SL	DBC 110 II	DBC 130 II	DBC 130L II	DBC 160	DBC 160L	DBC 250 / L II
5tons or less	●	●	●	●	●	●	●	●
10tons or less	●	●	●	●	●	●	●	●
15tons or less				●	●	●	●	●
20tons or less					○	●	●	
25tons or less						○		

Tool load monitoring

During cutting operations, abnormal loads caused by wear and tear of the tool are detected, and an alarm is triggered to prevent further damage from occurring.

Thermal compensation

A function to maintain high-precision machining quality by analyzing and correcting the amount of thermal displacement of a structure through a temperature sensor

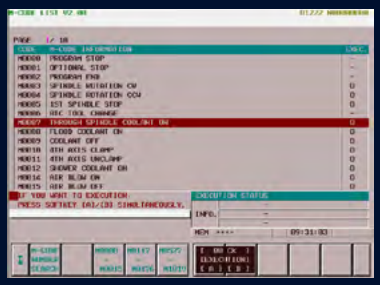

M/G-code list

Functional description of M code and G code

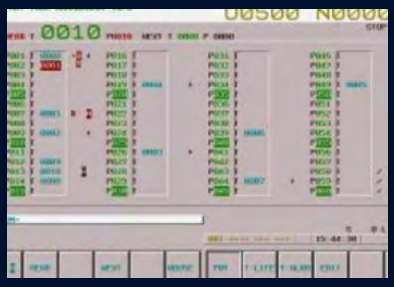

Tool management

This function controls information on the tools in the tool magazine pots.

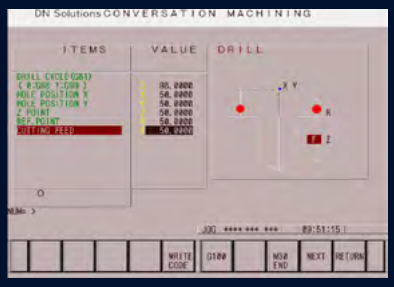

Pattern cycle

A function to automatically create frequently used part programs.

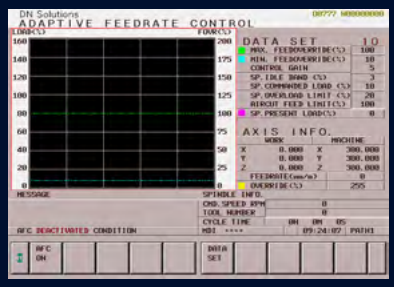

Adaptive Feed Control

Function to control feedrate so that the cutting can be carried out at a constant load (To adapt to the spindle load set up with constant load feedrate control function)

FANUC 31i/32i PLUS

FANUC 31i PLUS / 32i PLUS / 0iF PLUS maximizes customer productivity and convenience.

15" Touch screen + New OP

DN Solutions Fanuc 31iB/B5 Plus' operation panel enhances operating convenience by incorporating common-design buttons and layout. It features a Qwerty keyboard for fast and easy data input and operation.

Fanuc 31i/32i Plus

- 15-inch color display
- Intuitive and user-friendly design

USB and PCMCIA card QWERTY keyboard

- EZ-Guide i standard
- Ergonimic operator panel
- 4MB Memory
- Hot keys
- Enhance AICC BLOCK
- Touch pen provided as standard

iHMI touchscreen

iHMI provides an intuitive interface that uses a touchscreen for quick and easy operation.

Range of applications

Providing various applications related to planning, machining, improvement and utility, for customer convenience.

NUMERIC CONTROL SPECIFICATIONS

FANUC

Division	Item	Specifications	DBC 31iB Plus	DBC 32iB Plus	DBC 0iF Plus
Controlled axis	Controlled axes			5 (X,Y,Z,W,B)	
	Simultaneously controlled axes			4 axes	
	Additional controlled Axis	Add 1Axis (6th Axis)		●	
Data input/output	Fast data server			○	
	Memory card input/output			●	
	USB memory input/output			●	
	Large capacity memory(2GB)*2	Available Option only with 15" Touch LCD (iHMI Only) *2)		○	
Interface function	Embedded Ethernet			●	
	Fast Ethernet			○	
	Enhanced Embedded Ethernet function			●	
Operation	DNC operation	Included in RS232C interface.		●	
	DNC operation with memory card			●	
Program input	Workpiece coordinate system	G52 - G59		●	
	Addition of workpiece coordinate system	G54.1 P1 X 48 (48 pairs)		●	
	Tool number command			T4 digits	
	Tilted working plane indexing command	G68.2 TWP		○	
Feed function	Large capacity memory		○	○	○
	AI contour control 200 Block		X	X	●
	AI contour control 400 Block		X	X	○
	AI contour control 600 Block		X	●	X
	AI contour control 1000 Block		●	X	X
Operation Guidance Function	EZ Guidei (Conversational Programming Solution)			●	
	iHMI with Machining Cycle	Only with 15" Touch LCD standard *2)		●	
	EZ Operation package			●	
Setting and display	CNC screen dual display function			●	
Network	FANUC MTConnect			✪	
	FANUC OPC UA			✪	
Others	Display unit	15" color LCD with touch panel	●	●	●
	Part program storage size & Number of registerable programs	Part program 2MB_1000EA	X	X	●
		Part program 4MB_1000EA	●	●	X
		Part program 8MB_1000EA	○	○	X
		Part program 2MB_4000EA	X	X	X
		Part program 4MB_4000EA	○	○	X
		Part program 8MB_4000EA	○	○	X
		640M(256KB)_500 programs		X	
		1280M(512KB)_1000 programs		X	
		2560M(1MB)_1000 programs		X	
		5120M(2MB)_1000 programs		X	
		10240M(4MB)_1000 programs		●	
		20480M(8MB)_1000 programs		○	
		2560M(1MB)_2000 programs		X	
		5120M(2MB)_4000 programs		X	
		10240M(4MB)_4000 programs		○	
		20480M(8MB)_4000 programs		○	

● *Standard* ○ *Optional* X *N/A* ✪ *Available*

CONVENIENT OPERATION

Heidenhain TNC640

Superior hardware specifications

The TNC 640 features optimized motion control, short block processing times and special control strategies. Together with its uniform digital design and its integrated digital drive control (including inverters), it enables you to achieve high machining speeds and the best possible contour accuracy.

- 15.6" display
- 21GB Storage memory
- 5000 look ahead blocks
- High user convenience with folder structure data management

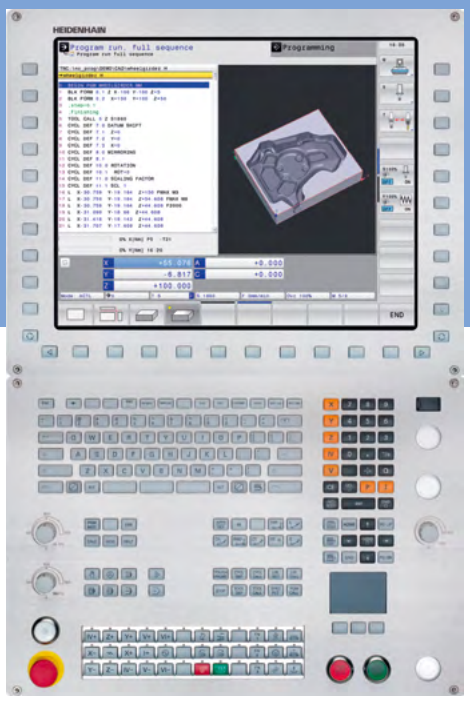

Conversational convenient function

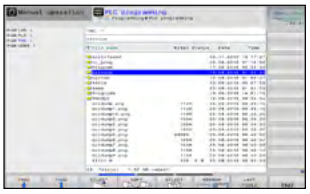

Data are controlled in the folder structure; convenient communication via USB devices

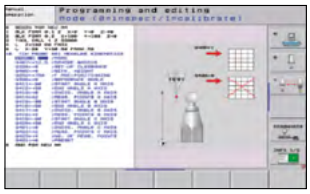

KinematicOpt & KinematicComp option
(Touch probe cycle for automatic measurement)

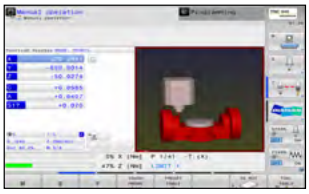

Collision protection system option

Adaptive feed control option

Various built-in pattern cycles for a wider scope of application (Software standard)

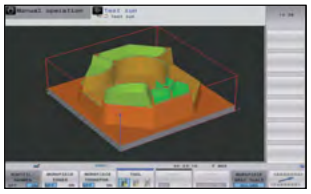

Graphic simulation

NUMERIC CONTROL SPECIFICATIONS

HEIDENHAIN

Description	Item	Specifications	DBC TNC640
Controlled axis	Controlled axes		5 (X,Y,Z,W,B)
	Simultaneously controlled axes		4 axes
Data input/output	USB memory input/output		●
Interface function	Embedded Ethernet		●
Feed function	Look-ahead	5000 Blocks	●
Axis Compensation	KinematicsOpt	Automatic measurement and optimization of machine kinematics	○
Collision monitoring	Dynamic collision monitoring (DCM)		○
Network	MTConnect		✪
Others	Display unit	15.1 inch TFT color flat panel	●
		15.1 inch TFT color with Touch Panel	○
		19 inch TFT color flat panel	○
		19 inch TFT color with Touch Panel	○
	Part program storage size & Number of registerable programs	21GB	●
		1.8GB	X

● *Standard* ○ *Optional* X *Not applicable* ✪ *Available*

CONVENIENT OPERATION

SIEMENS 840D

15.6" screen + new operation panel

The newly-designed operation panel improves the customer convenience by incorporating and using common-design buttons and layouts, and includes the familiar QWERTY keyboard for fast and easy operation.

- 15.6" display
- 10MB high capacity user memory
- USB & ethernet (standard)
- QWERTY keyboard (standard)
- High-speed calculation and simulation can be fulfilled by improved processor functionality

Convenient conversational functionality

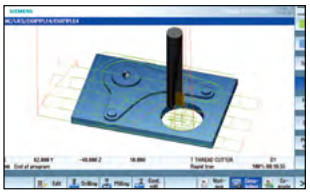

Simulation and machining contour monitoring

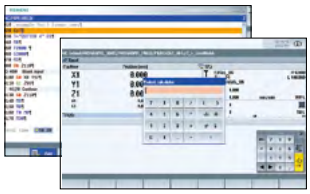

Smart function

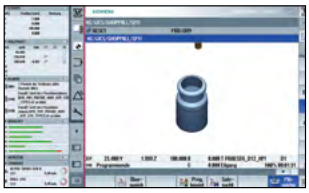

Side screen widget

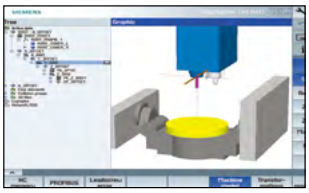

3D collision avoidance and collision avoidance ECO option

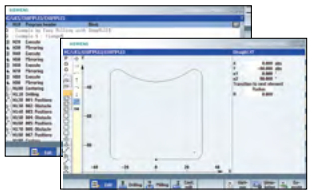

Shop mill part programming

NUMERIC CONTROL SPECIFICATIONS

SIEMENS

Description	Item	Specifications	DBC S840Dsl
Controlled axis	Controlled axes	-	5 (X,Y,Z,W,B)
	Simultaneously controlled axes	-	4 axes
Data input/output	Memory card input/output	(Local drive)	●
	USB memory input/output		●
Interface function	Ethernet	(X130)	●
Operation	On network drive	(without EES option, Extcall)	●
	On USB storage medium, e.g. memory stick	(without EES option, Extcall)	●
Program input	Workpiece coordinate system	G54 - G57	●
	Addition of workpiece coordinate system	G505 - G599	●
Interpolation & Feed function	Advanced surface		●
	Top surface		○
	Look ahead number of block	S/W version 4.8	1000
Programming & Editing function	3D simulation, finished part		●
	Simultaneous recording		●
	Measure kinematics		X
	DXF Reader for PC integrated in SINUMERIK Operate		○
Operation Guidance Function	ShopMill		●
	EZ Work		●
Setting and display	Operation via a VNC viewer		●
Network	MTConnect		Available
	OPCUA		○
Etc. function	15.6" color display with touch screen		●
	19" color display without touch screen		○
	21.5" color display with touch screen		○
	CNC user memory	10 MB	●
	Expansion by increments	2 ~ 12 MB	○
	Collision avoidance		○
	Collision avoidance ECO (machine, working area)		○

● *Standard* ○ *Optional* X *Not applicable* ✪ *Available*

POWER | TORQUE

DBC S series

DBC 110S

Max. spindle speed : **3000** r/min

Max. power : **30/22** kW
40.2/29.5 Hp

Max Torque : **1104** N · m
814.8 ft-lbs

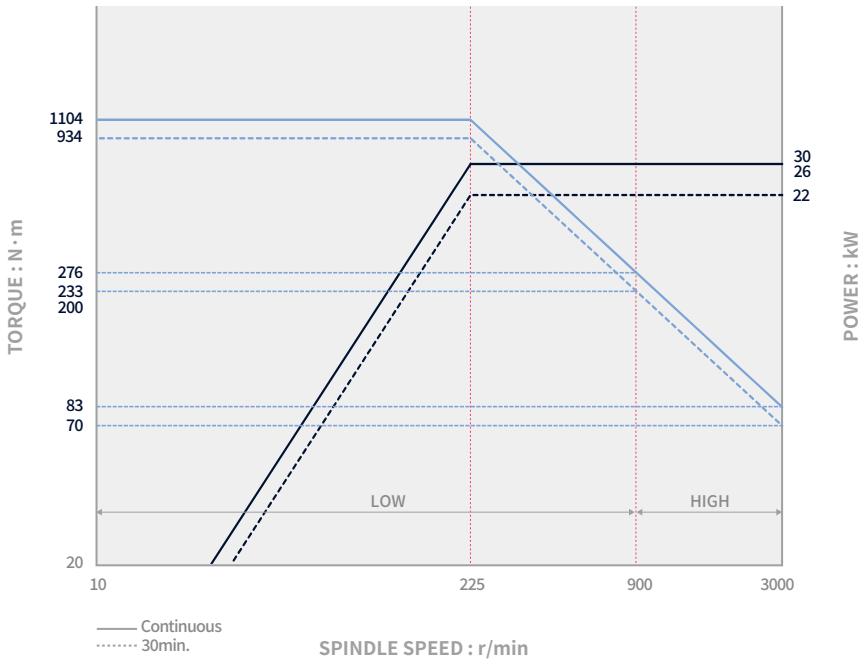

DBC 130S /SL

Max. spindle speed : **2500** r/min

Max. power : **37/21** kW
49.6/28.2 Hp

Max Torque : **3028** N · m
2234.7 ft-lbs

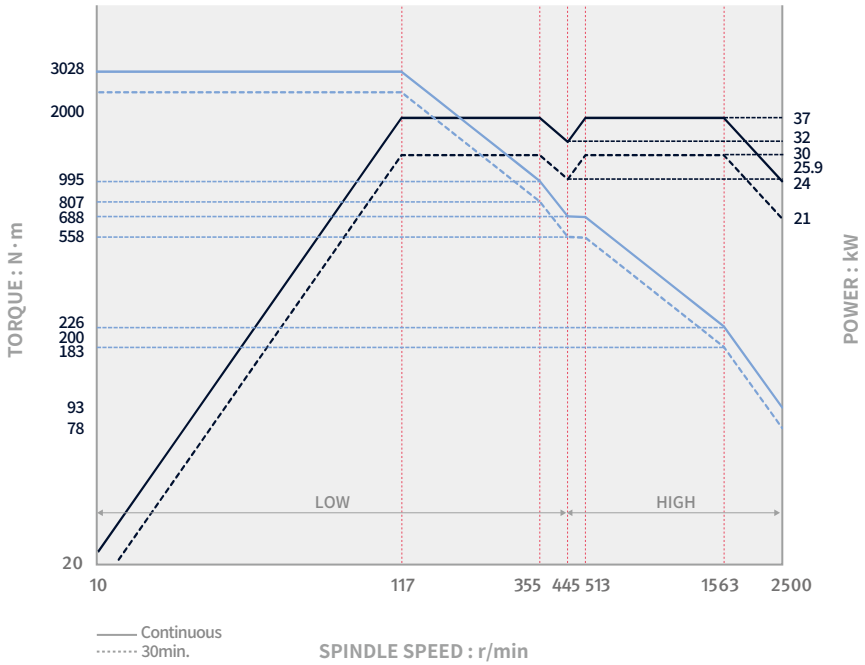

POWER | TORQUE

DBC II series

DBC 110II

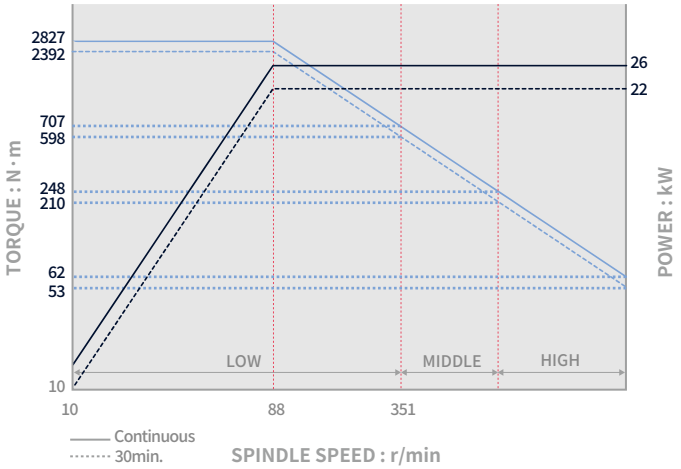

DBC 110II

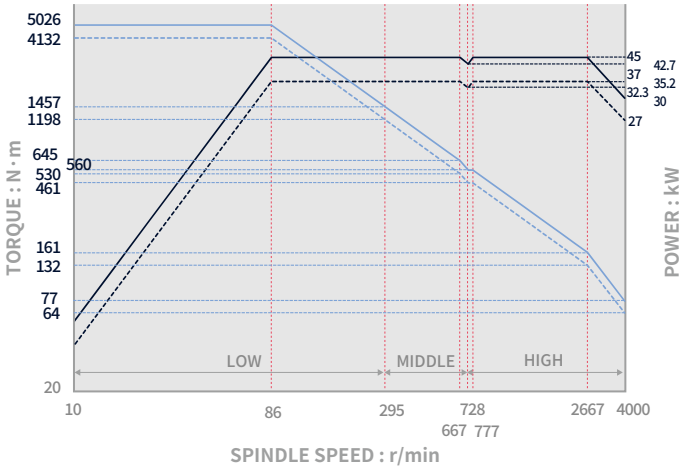

DBC 130II / 130LII

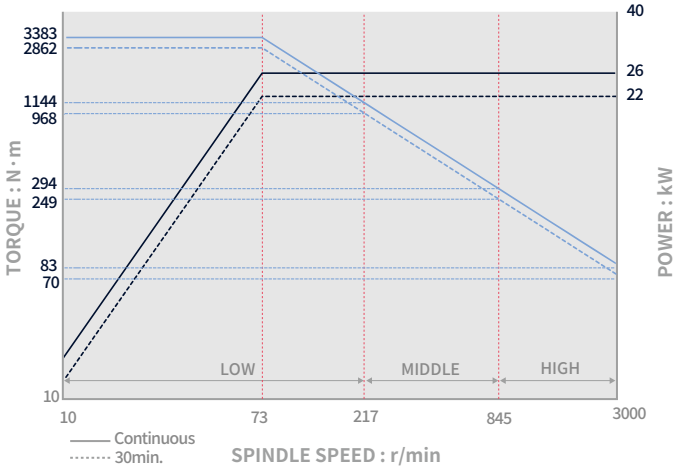

DBC 130II / 130LII

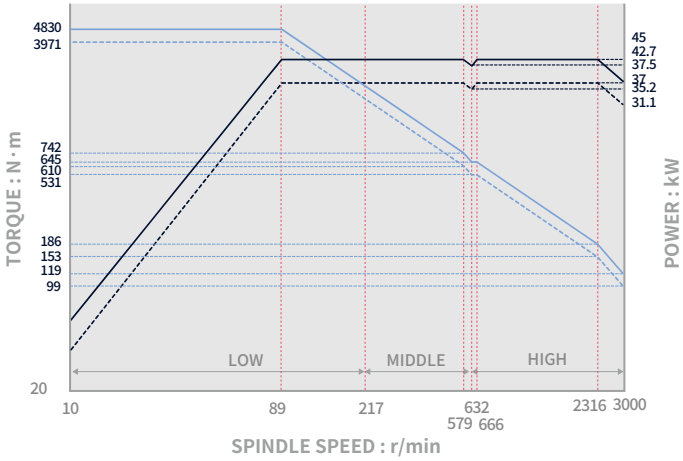

DBC 160 / L

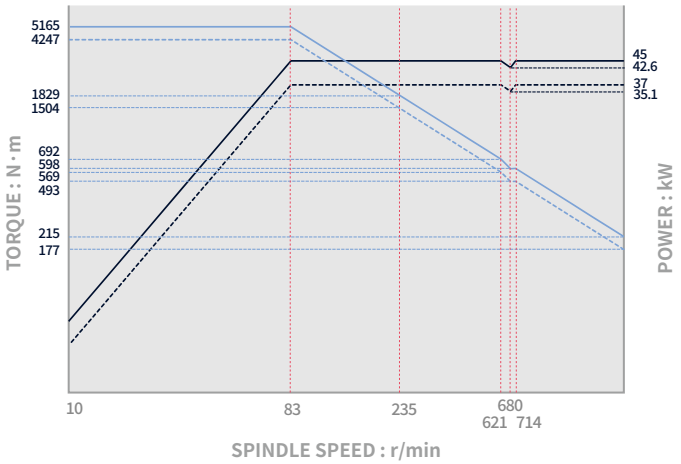

DBC 250 / 250 LII

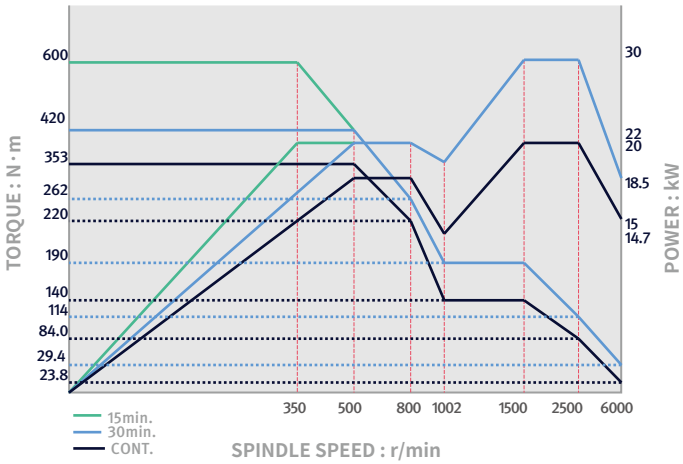

EXTERNAL DIMENSIONS

DBC 110S

Unit: mm(inch)

TOP

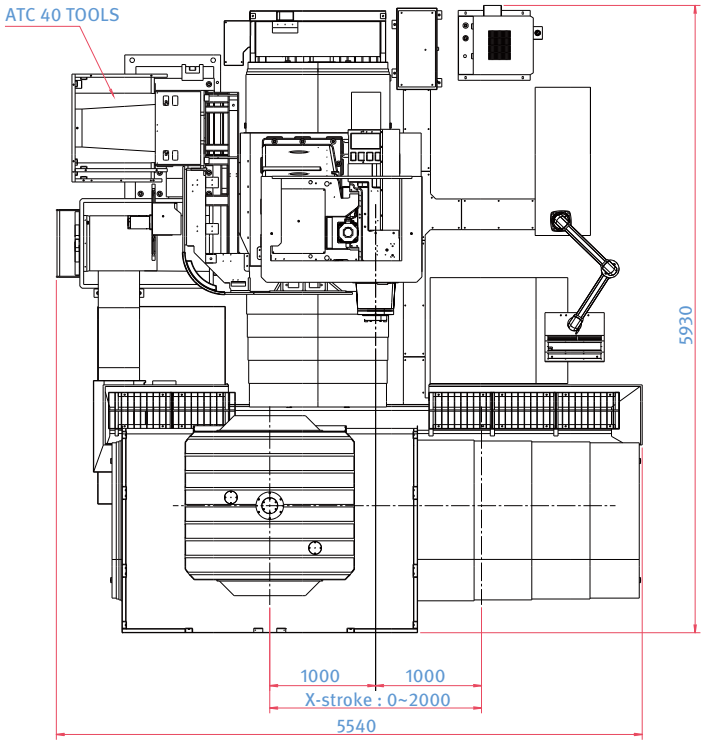

FRONT

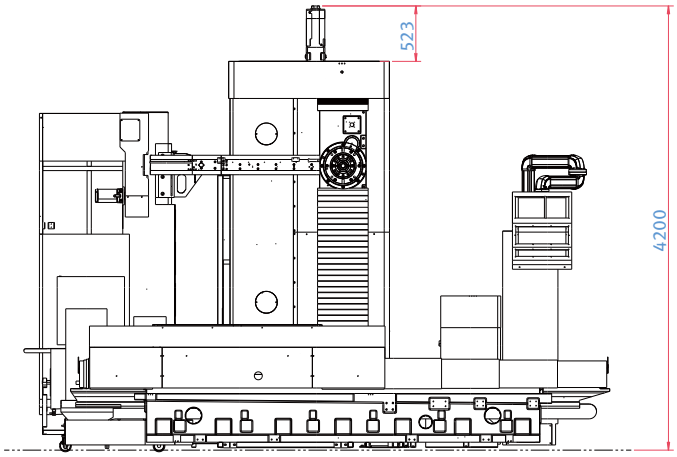

SIDE

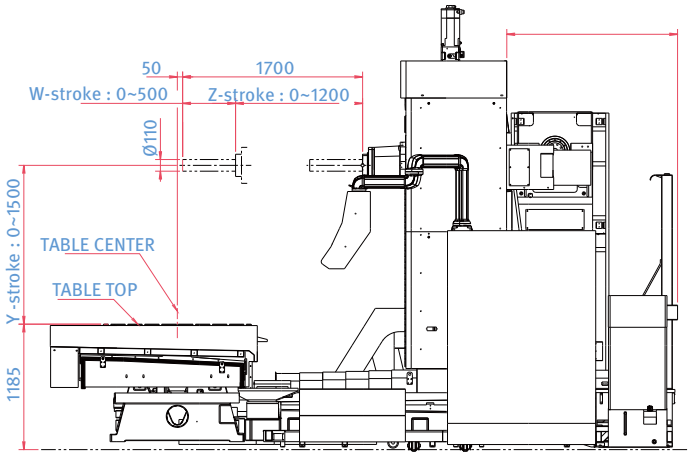

TABLE 1400 X 1600 (55.1 X 63.0)

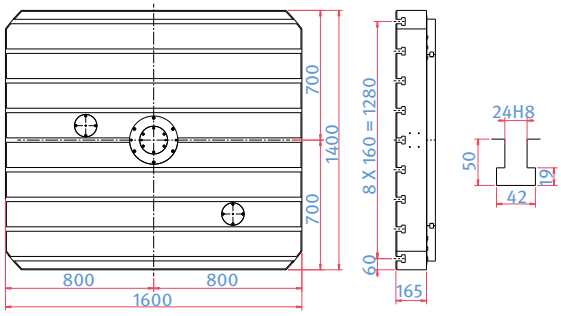

** Please comply with our company's installation guideline, such as ground condition and anchoring, in order to achieve the maximum precision and performance of the machine.*

*** Providing anchoring bolts. Foundation work must be done.*

** Some peripheral equipment can be placed in other places.*

EXTERNAL DIMENSIONS

DBC 130S

Unit: mm(inch)

TOP

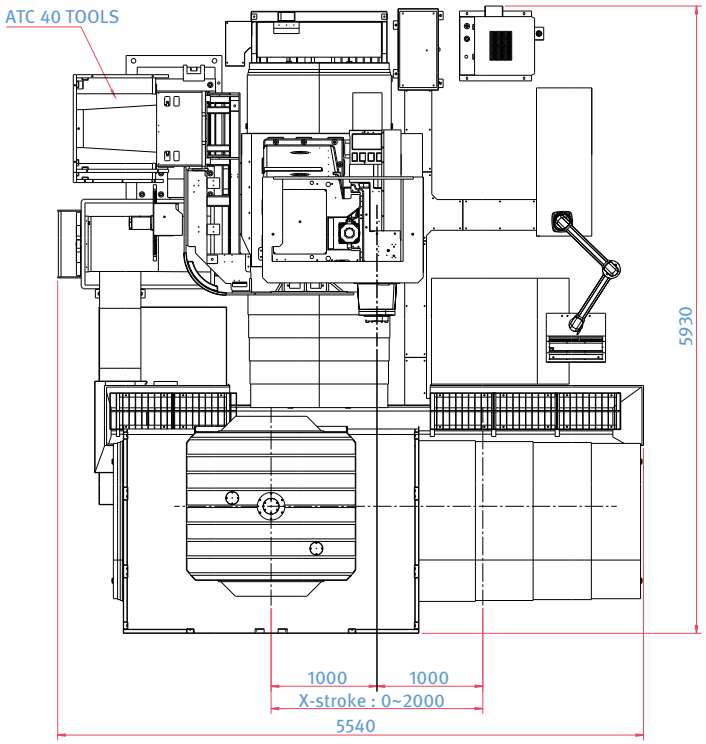

FRONT

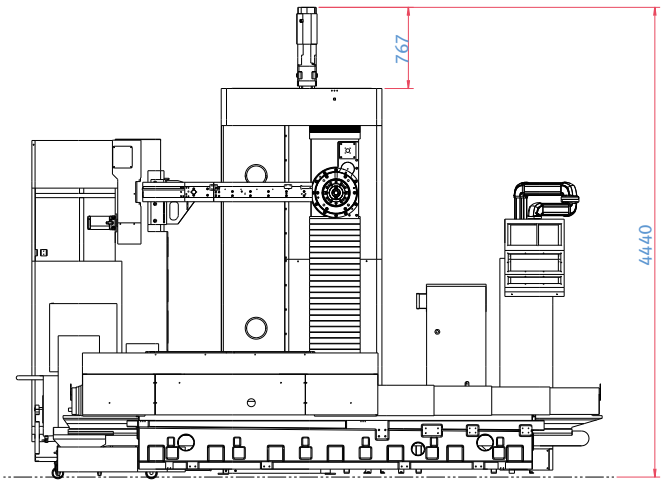

SIDE

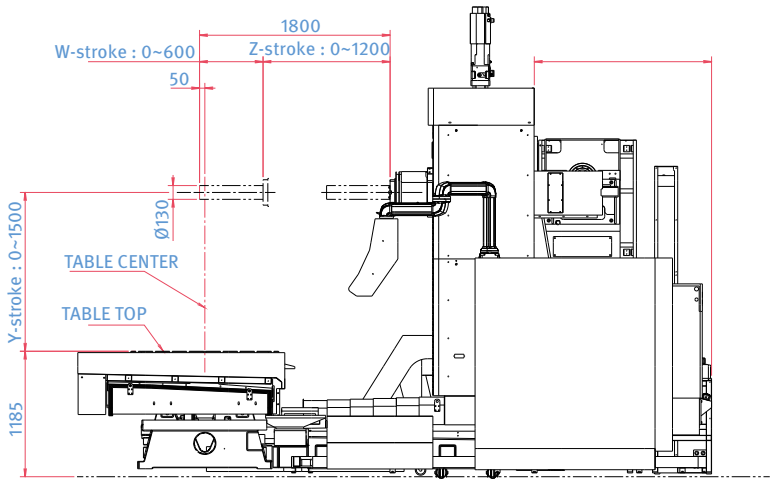

TABLE 1400 X 1600 (55.1 X 63.0)

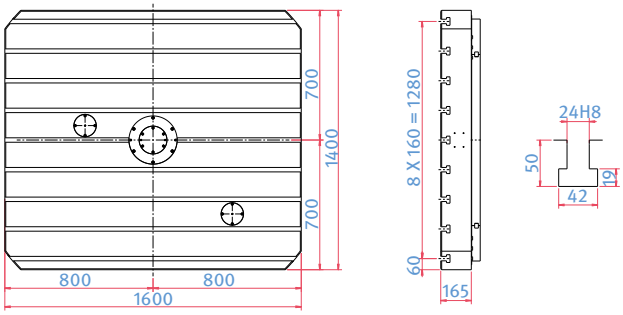

** Please comply with our company's installation guideline, such as ground condition and anchoring, in order to achieve the maximum precision and performance of the machine.*

*** Providing anchoring bolts. Foundation work must be done.*

** Some peripheral equipment can be placed in other places.*

EXTERNAL DIMENSIONS

DBC 130SL

Unit: mm(inch)

TOP

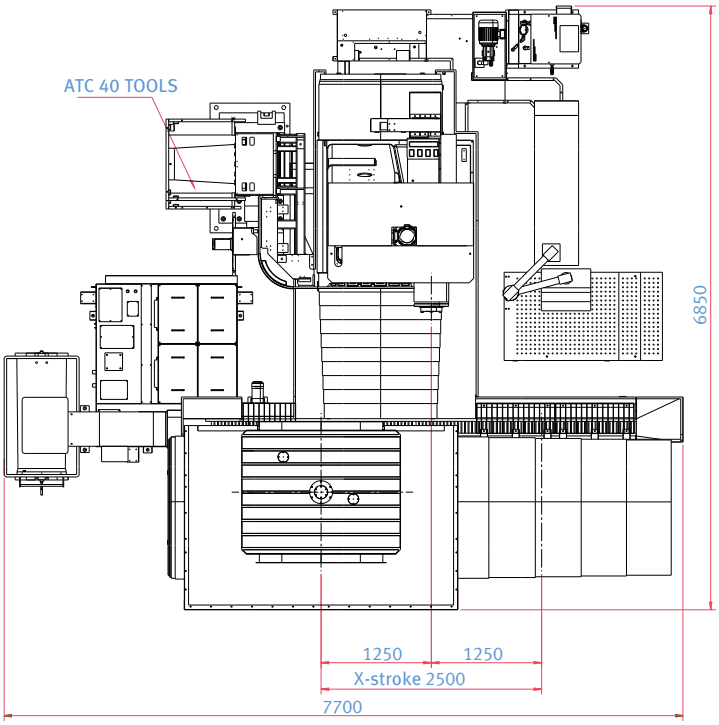

FRONT

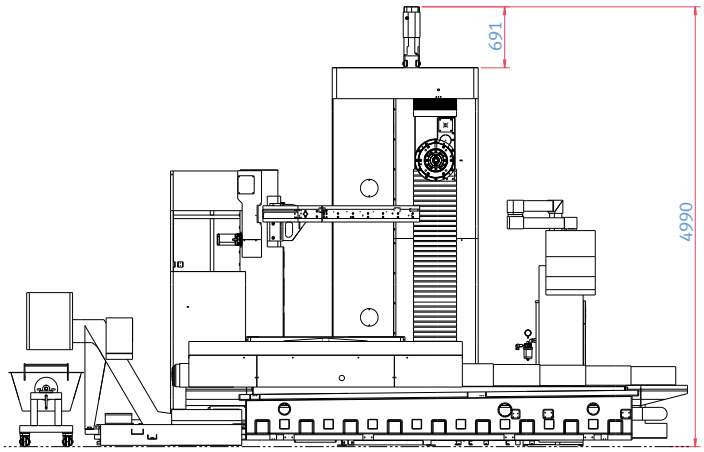

SIDE

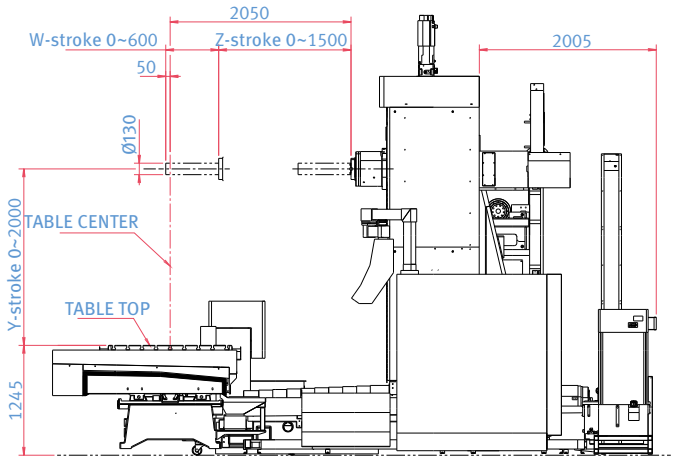

TABLE 1400 X 1800 (55.1 X 70.8)

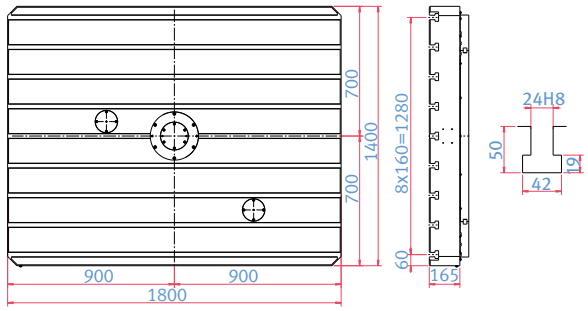

** Please comply with our company's installation guideline, such as ground condition and anchoring, in order to achieve the maximum precision and performance of the machine.*

*** Providing anchoring bolts. Foundation work must be done.*

** Some peripheral equipment can be placed in other places.*

EXTERNAL DIMENSIONS

DBC 110II

Unit: mm(inch)

TOP

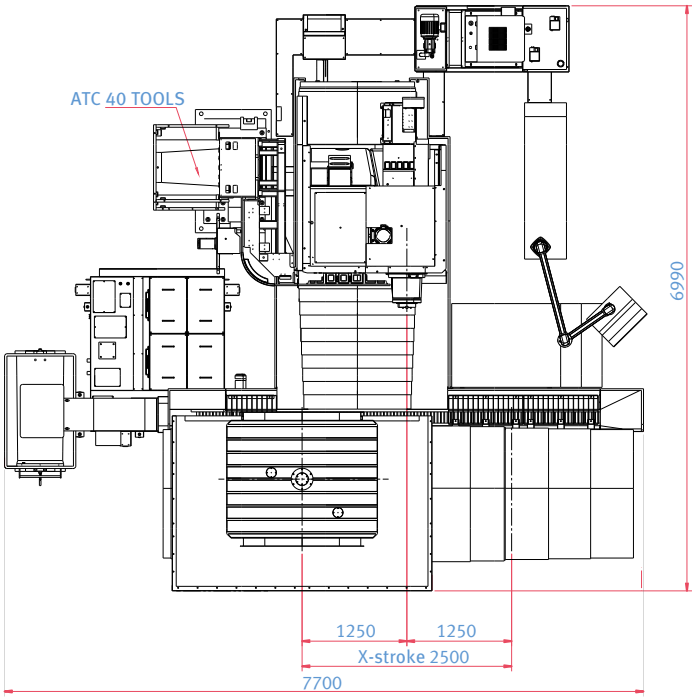

FRONT

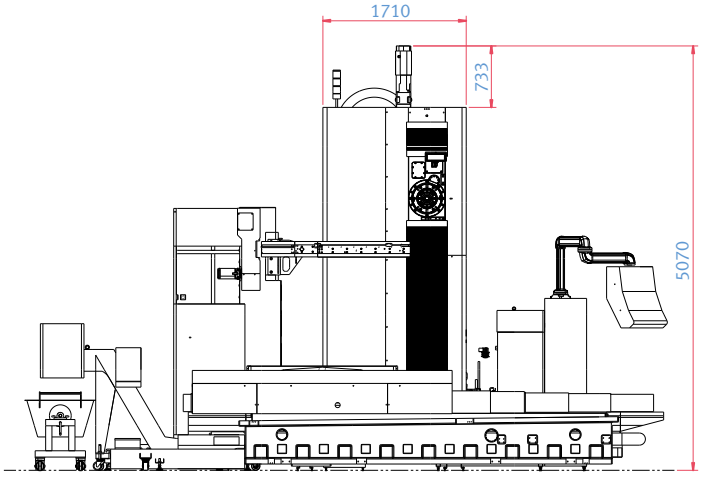

SIDE

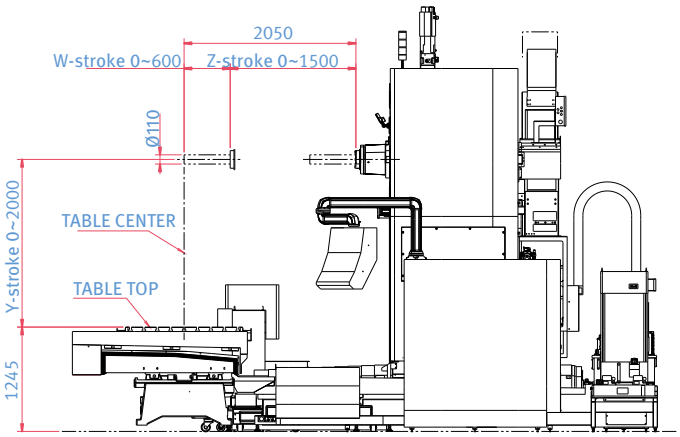

TABLE 1400 X 1800 (55.1 X 70.9)

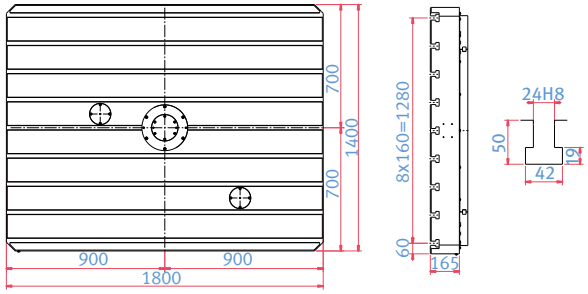

** Please comply with our company's installation guideline, such as ground condition and anchoring, in order to achieve the maximum precision and performance of the machine.*

*** Providing anchoring bolts. Foundation work must be done.*

** Some peripheral equipment can be placed in other places.*

EXTERNAL DIMENSIONS

DBC 130II / 130LII / 250II / 250LII

Unit: mm(inch)

TOP

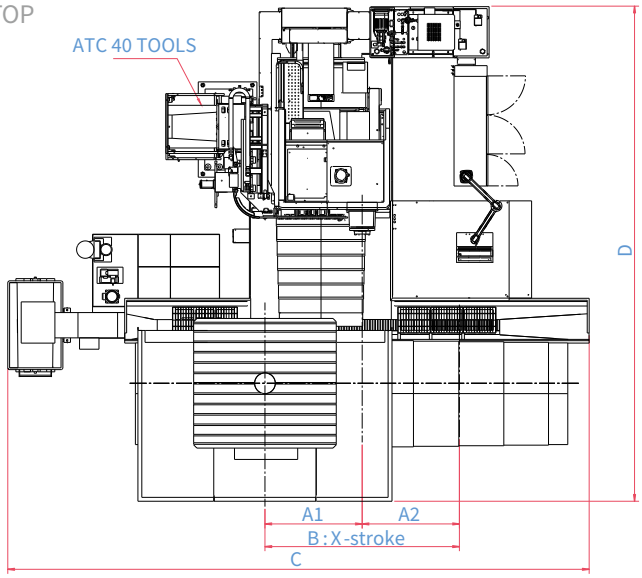

FRONT

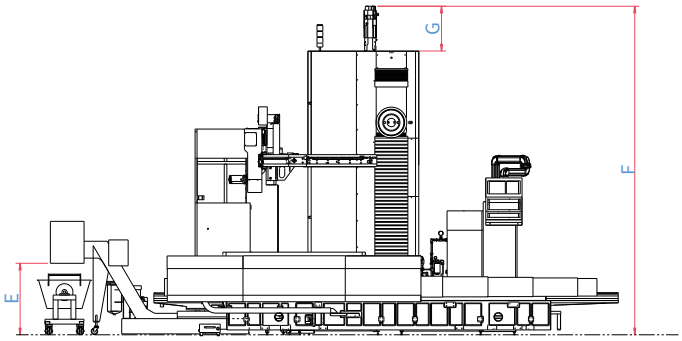

SIDE (DBC 130II / 130LII)

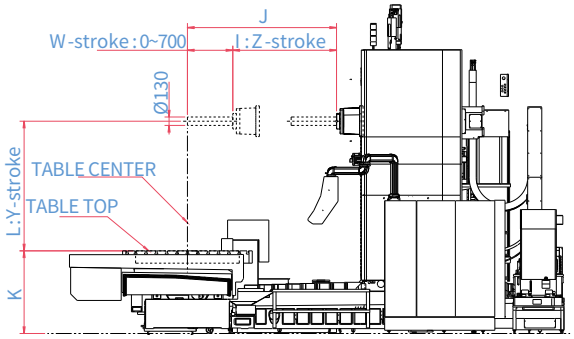

SIDE (DBC 250II / 250LII)

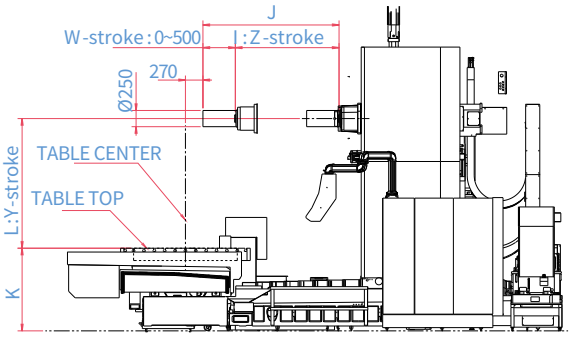

TABLE 1600 X 1800 (63.0 X 70.9)

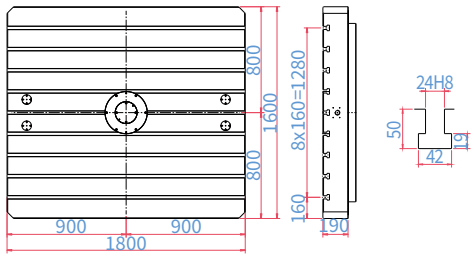

TABLE 1800 X 2000 (70.9 X 78.7)
{2000 X 2200 (78.7 X 86.6)} OPTION

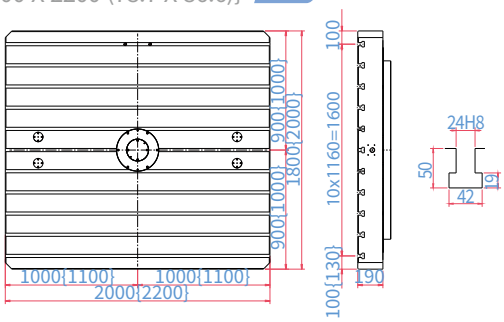

Model	A1 / A2	B	C	D	E	F	G	H	I	J	K	L
DBC 130II	1500 (59.1)	0-3000 (0-118.1)	8970 (353.1)	7660 (301.6)	1103 (43.4)	5070 (199.6)	690 (27.2)	0-700 (0-27.6)	0-1600 (0-63.0)	2300 (90.6)	1275 (50.2)	0-2000 (0-78.7)
DBC 130LII	2000 (78.7)	0-4000 (0-157.5)	9970 (392.5)	8060 (317.3)	1103 (43.4)	5570 (219.3)	690 (27.2)	0-700 (0-27.6)	0-2000 (0-78.7)	2700 (106.3)	1275 (50.2)	0-2500 (0-98.4)
DBC 250II	1500 (59.1)	0-3000 (0-118.1)	8970 (353.1)	7660 (301.6)	1103 (43.4)	5070 (199.6)	690 (27.2)	0-500 (0-19.7)	0-1600 (0-63.0)	2100 (82.7)	1275 (50.2)	0-2000 (0-78.7)
DBC 250LII	2000 (78.7)	0-4000 (0-157.5)	9970 (392.5)	8060 (317.3)	1103 (43.4)	5570 (219.3)	690 (27.2)	0-500 (0-19.7)	0-2000 (0-78.7)	2500 (98.4)	1275 (50.2)	0-2500 (0-98.4)

** Please comply with our company's installation guideline, such as ground condition and anchoring, in order to achieve the maximum precision and performance of the machine.*
*** Providing anchoring bolts. Foundation work must be done.*
** Some peripheral equipment can be placed in other places.*

EXTERNAL DIMENSIONS

DBC 160 / 160 L

Unit: mm(inch)

TOP

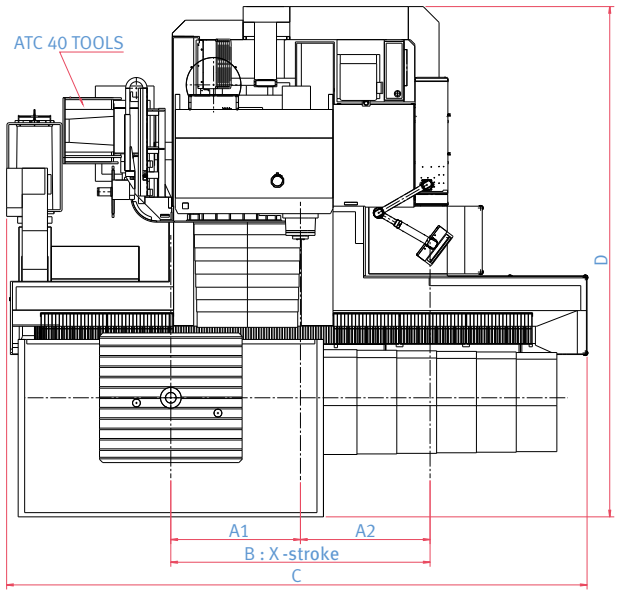

FRONT

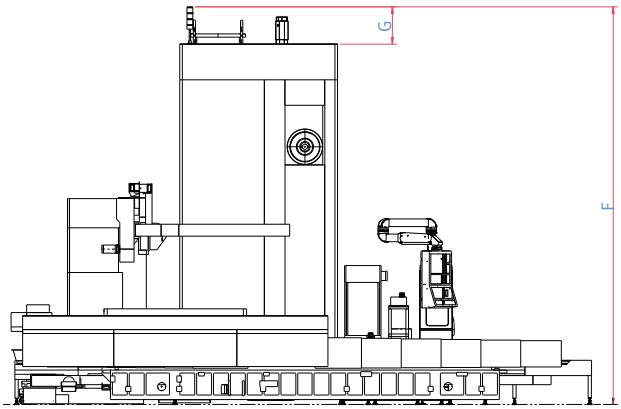

SIDE

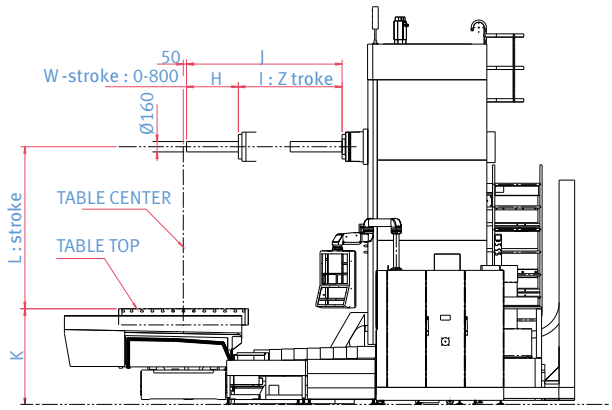

TABLE 2000 X 2200 (78.7 X 86.6)

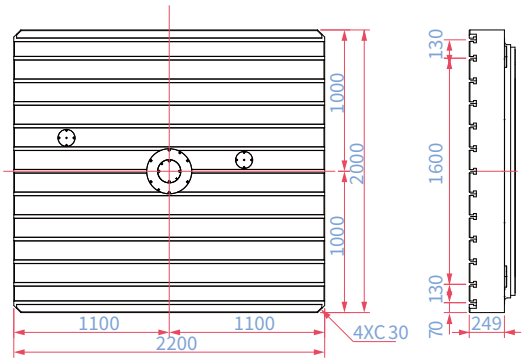

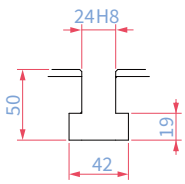

Model	A1 / A2	B	C	D	E	F	G	H	I	J	K	L
DBC 160	2000 (78.7)	0-4000 (0-157.5)	8958 (352.7)	7880 (310.2)	1103 (43.4)	6150 (242.1)	575 (22.6)	0-800 (0-31.5)	0-1600 (0-63.0)	2400 (94.5)	1475 (58.1)	2500 (98.4)
DBC 160L	2500 (98.4)	0-5000 (0-196.9)	10000 (393.7)	8300 (326.8)	1103 (43.4)	6650 (261.8)	575 (22.6)	0-800 (0-31.5)	0-2000 (0-78.7)	2400 (94.5)	1475 (58.1)	3000 (118.1)

** Please comply with our company's installation guideline, such as ground condition and anchoring, in order to achieve the maximum precision and performance of the machine.*
*** Providing anchoring bolts. Foundation work must be done.*

** Some peripheral equipment can be placed in other places.*

EXTERNAL DIMENSIONS

DBC 130II with APC OPTION

Unit: mm(inch)

TOP

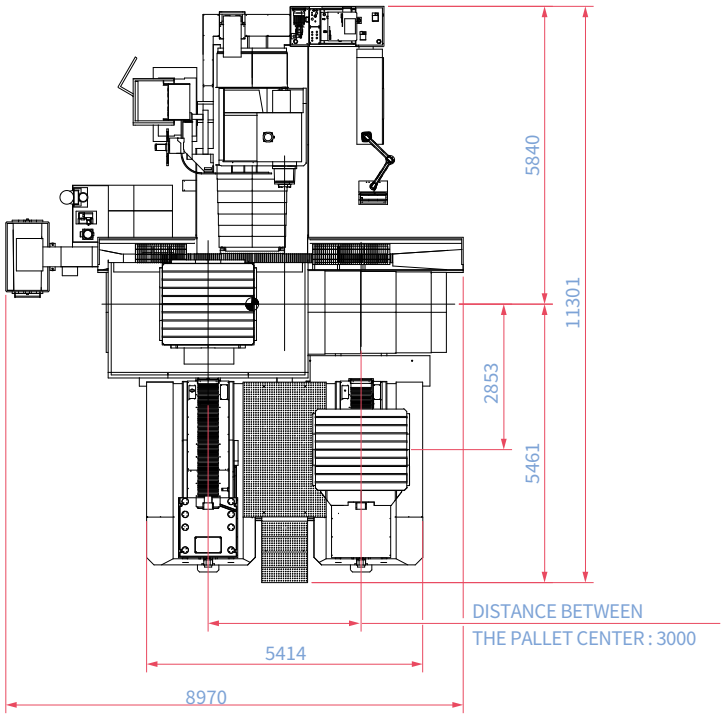

FRONT

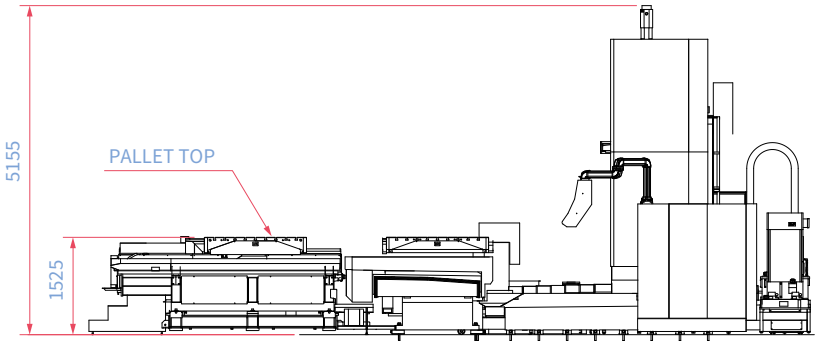

** Please comply with our company's installation guideline, such as ground condition and anchoring, in order to achieve the maximum precision and performance of the machine.*
*** Providing anchoring bolts. Foundation work must be done.*

APC Pallet

1600 x 1800 (63.0 X 70.9) OPTION
APC loading capacity : 10 tons

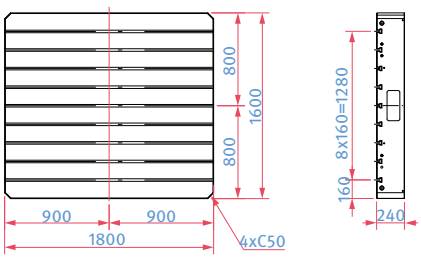

1800 x 2000 (70.9 x 78.7) OPTION
APC loading capacity : 8 tons

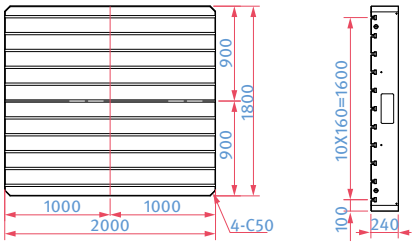

T-Slot

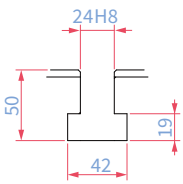

** Some peripheral equipment can be placed in other places.*

MACHINE SPECIFICATIONS

DBC S series

Description			Unit	DBC 110S	DBC 130S	DBC 130SL
Travels	Travel distance	X-axis	mm (inch)	2000 (78.7)		2500 (98.4)
		Y-axis	mm (inch)	1500 (59.1)		2000 (78.7)
		Z-axis	mm (inch)	1200 (47.2)		1500 (59.1)
		W-axis	mm (inch)	500 (19.7)	600 (23.6)	
	Distance from spindle nose to table top		mm (inch)	0 ~ 1500 (0~59.1)		0~2000 (0~78.7)
	Distance from spindle nose to table center		mm (inch)	550 ~ 1750 (21.7~2.9)		550 ~ 2050 (21.7~80.7)
Feedrate	Rapid traverse	X, Y, Zaxes	m/min	12		
		W-axis	m/min	6		
	Cutting feedrate	X, Y, Zaxes	mm/min	1 ~ 6000		
Table	Table size		mm (inch)	1400 x 1600 (55.1x63.0)		1400 x 1800 (55.1x70.9)
	Max. Swing diameter	Without semi-S/G	mm (inch)	ø2550 (100.4)		ø3400 (133.9)
		With semi-S/G	mm (inch)	ø2100 (82.7)		ø2250 (88.6)
	Load capacity	1400 x 1600 mm	kg (lb)	7000 (15432.1)	8000 {10000} (17636.7 {22045.9})	-
		1400 x 1800 mm	kg (lb)	-	-	10000 (22045.9)
		1600 x 1800 mm	kg (lb)	-	-	-
		1800 x 2000 mm	kg (lb)	-	-	-
		2000 x 2200 mm	kg (lb)	-	-	-
Spindle	Max. spindle speed		r/min	3000	2500	
	Boring spindle diameter		mm (inch)	110 (4.3)	130 (5.1)	
	Quill diameter		mm (inch)	-	-	-
Motor	Spindle motor (30 min/cont.) {AMP UP: 15 min/cont.}		kW (Hp)	26/22 (34.9/29.5) {30/22 (40.2/29.5)}*	37/30 (49.6/40.2)	
ATC OPTION	Tool storage capacity		ea	40 {60 / 90 / 120}*		
	Tool shank			MAS403 BT50		
	Max. tool diameter		mm (inch)	ø130 / 250 / 400 / 600(1) (5.1 / 9.8 / 15.7 / 23.6)		
	Max. tool length		mm (inch)	600 (23.6)		
	Max. tool weight		kg (lb)	30 (66.1)		
	Max. tool moment		N·m (ft-lbs)	34.3 (25.3)		
	Method of tool selection			Fixed address		
Power source	Electric power supply (rated capacity)		kVA	70		
Machine dimensions	Height		mm (inch)	4200 (165.4)	4440 (174.8)	4990 (196.5)
	Length x Width		mm (inch)	5540 x 5930 (218.1 x 233.5)		7700 x 6850 (303.1 x 269.7)
	Weight		kg (lb)	29000 (63933.1)	30000 (66137.7)	36000 (79365.2)
CNC system				Fanuc 32i Plus	DN Solutions Fanuc i Plus	

*{ }: Option

(1) For Ø250 and Ø400 mm tools, neighboring pots must be empty. For Ø600 mm tools, neighboring two pots must be empty.

MACHINE SPECIFICATIONS

DBC II series

Description			Unit	DBC 110II	DBC 130II	DBC 130LII	DBC 160	DBC 160L	DBC 250II	DBC 250LII
Travels	Travel distance	X-axis	mm (inch)	2500 (98.4)	3000 (118.1)	4000(157.5)	4000 (157.5)	5000 (196.9)	3000 (118.1)	4000 (157.5)
		Y-axis	mm (inch)	2000 (78.7)		2500 (98.4)	2500 (98.4)	3000 (118.1)	2000 (78.7)	2500 (98.4)
		Z-axis	mm (inch)	1500 (59.1)	1600 (63.0)	2000 (78.7)	1600 (63.0)	2000 (78.7)	1600 (63.0)	2000 (78.7)
		W-axis	mm (inch)	550 (21.7)	700 (27.6)		800 (31.5)	800 (31.5)	500 (19.7)	500 (19.7)
	Distance from spindle nose to table top		mm (inch)	0 ~ 2000 (0~78.7)		0 ~ 2500 (0~98.4)	0 ~ 2500 (0~98.4)	0 ~ 3000 (0~118.1)	0 ~ 2000 (0~78.7)	0 ~ 2500 (0~98.4)
	Distance from spindle nose to table center		mm (inch)	550 ~ 2050 (21.7 ~ 80.7)	700 ~ 2300 (27.6 ~ 90.6)	700 ~ 2700 (27.6 ~ 106.3)	850 ~ 2450 (33.5 ~ 96.5)	850 ~ 2850 (33.5 ~ 112.2)	770 ~ 2370 (30.3 ~ 93.3)	770 ~2770 (30.3 ~ 109.1)
Feedrate	Rapid traverse	X, Y, Z axes	m/min	12	10	10 / 8 / 10 {8 / 8 / 10}*	10 / 10 / 10 {8 / 10 / 10}(1)	7.5 / 10 / 10	10	10 / 8 / 10
		W-axis	m/min	6(0.2)					10	
	Cutting feedrate	X, Y, Z axes	mm/min	1 ~ 6000	1 ~ 4000					
Table	Table size		mm (inch)	1400 x 1800 (55.1 x 70.9)	1600 x 1800 (63.0 x 70.9) {1800 x 2000 (70.9 x 78.7), 2000 x 2200 (78.7 x 86.6)}*		2000 x 2200 (78.7 x 86.6)	2000 × 2200 (78.7 x 86.6)	1600 x 1800 (63.0 x 70.9) {1800 x 2000 (70.9 x 78.7), 2000 x 2200 (78.7 x 86.6)}*	
	Max. Swing diameter	Without semi-S/G	mm (inch)	ø3400 (ø133.9)	ø3900 (ø153.5)	ø4800 (ø189.0)	ø4800 (ø189.0)	ø5000 (ø196.9)	ø3900 (ø153.5)	ø4800 (ø189.0)
		With semi-S/G	mm (inch)	ø2250 (ø88.6)	ø3400 (ø133.9)	ø3400 (ø133.9)	ø3400 (ø133.9)	ø4100 (ø161.4)	ø3400 (ø133.9)	ø3400 (ø133.9)
	Load capacity	1400 x 1600 mm (55.1 x 63.0 inch)	kg (lb)	-	-	-	-	-	-	-
		1400 x 1800 mm (55.1 x 70.9 inch)	kg (lb)	10000 (22045.9)	-	-	-	-	-	-
		1600 x 1800 mm (63.0 x 70.9 inch)	kg (lb)	-	15000 (3306.9)			-	15000 (3306.9)	
		1800 x 2000 mm (70.9 x 78.7 inch)	kg (lb)	-	{13000 (28659.7)}*	{13000 (28659.7), 20000 (44091.8)}*		-	{13000 (28659.7)}*	
		2000 x 2200 mm (78.7 x 86.6 inch)	kg (lb)	-	{12000 (26455.1)}*	{12000 (26455.1), 19000}*	20000 {25000} (44091.8 {55114.8}*)	20000 (44091.8)	{12000 (26455.1)}*	
Spindle	Max. spindle speed		r/min	4000	3000		2000	2000	6000	
	Boring spindle diameter		mm (inch)	110 (4.3)	130 (5.1)		160 (6.3)	160 (6.3)	-	-
	Quill diameter		mm (inch)	-			-	-	250 (9.8)	
Motor	Spindle motor (30 min/cont.) {AMP UP: 15 min/cont.}		kW (Hp)	26/22 {30/22}*, {45/37}* (34.9/29.5 {40.2/29.5}, {60.3/49.6})			45/37 (60.3/49.6)		30/22 (40.2/29.5)	
ATC OPTION	Tool storage capacity		ea	40 {60 / 90 / 120}*						
	Tool shank			MAS403 BT50						
	Max. tool diameter		mm	ø130 / 250 / 400 / 600(2) (5.1 / 9.8 / 15.7 / 23.6)						
	Max. tool length		mm (inch)	600 (23.6)						
	Max. tool weight		kg (lb)	30 (66.1)						
	Max. tool moment		N·m (ft-lbs)	34.3 (25.3)						
	Method of tool selection			Fixed address						
Power source	Electric power supply (rated capacity)		kVA	70 {90 kVA with 45kW motor}*			90		70	
Machine dimensions	Height		mm (inch)	5070 (199.6)	5070 (199.6)	5570 (219.3)	6140 (241.7)	6650 (261.8)	5070 (199.6)	5570 (219.3)
	Length x Width		mm (inch)	7630 x 6990 (300.4 x 275.2)	8970 x 7640 (353.1 x 300.8)	9970 x 8040 (392.5 x 316.5)	9000 X 7900 (354.3 x 311.0)	10000 x 8300 (393.7 x 326.8)	8970 x 7640 (353.1 x 300.8)	9970 x 8040 (392.5 x 316.5)
	Weight		kg (lb)	36000 (79365.2)	43000 (94797.4)	48000 {50000}* (105820.3 {110229.5})	49000 (108024.9)	51000 (112434.1)	43000 (94797.4)	48000 (105802.3)
CNC system				F31iB Plus {Heidenhain, Siemens}						

*{ }: Option

(1) For Ø250 and Ø400 mm tools, neighboring pots must be empty. For Ø600 mm tools, neighboring two pots must be empty.

WHY DN SOLUTIONS

The DN Solutions promise, MACHINE GREATNESS, has two important meanings. The first is simple: DN Solutions makes great machines. The second is a challenge to our end-users. With a product line that is this comprehensive, accurate and reliable, we equip our customers to machine greatness. **The big question: *Why should you choose DN Solutions over other options?***

Here's why…

WHAT YOU MAKE AND HOW YOU MAKE IT MATTERS—SO MAKE IT GREAT WITH DN SOLUTIONS.

UNBEATABLE MACHINES

You won't find a more comprehensive range or a better combination of value, performance and reliability anywhere else.

READILY AVAILABLE - ANYWHERE IN THE WORLD

Machining centres (including 5-axis machines), lathes, multi-tasking turning centres and mill-turn machines, and horizontal borers with best-in-class specifications are all available…ready to install.

ROBUST PRODUCT LINE

We offer an impressive range of machine models and hundreds of configurations. Whatever your machining needs and requirements, there's a DN Solutions for you.

EXPERT SERVICE

Our dedicated, experienced and knowledgeable team is totally committed to improving your productivity, growth and success.

CUSTOMER SUPPORT AND SERVICES

We're there for you whenever you need us.

We help our customers operate at maximum efficiency by providing them with a range of tried, tested and trusted services - from pre-sales consultancy to post-sales support.

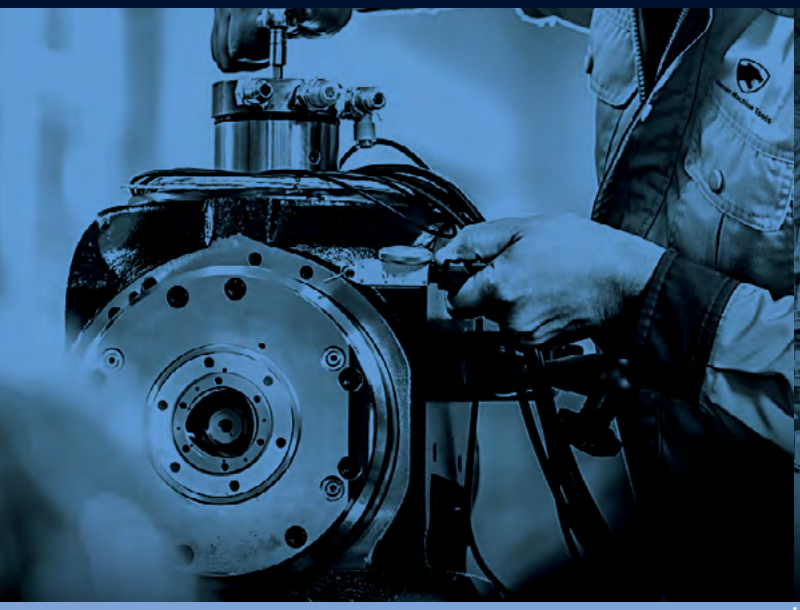

FIELD SERVICES

- On-site service
- Machine installation and testing
- Scheduled preventive maintenance
- Machine repair service

PARTS SUPPLY

- Supplying a wide range of original DN Solutions spare parts
- Parts repair service

TRAINING

- Programming, machine setup and operation
- Electrical and mechanical maintenance
- Applications engineering

TECHNICAL SUPPORT

- Supports machining methods and technology
- Responds to technical queries
- Provides technical consultancy

RESPONDING TO CUSTOMERS
ANYTIME, ANYWHERE

DN Solutions Global Network

DN Solutions provides systems-based professional support services, before and after the machine tool sale, by responding quickly and efficiently to customers. By supplying spare parts, product training, field service and technical support, we provide the expert care, attention and assistance our customers expect from a market leader.

Global sales and service support network

4	Corporations
155	Dealer networks
51	Technical centers Technical Center, Sales Support, Service Support, Parts Support
200	Service posts
3	Factories

dn-solutions.com

Head Office
22F T Tower, 30, Sowol-ro 2-gil
Jung-gu, Seoul, Korea, 04637
Tel +82-2-6972-0370/0350
Fax +82-2-6972-0400

DN Solutions America
19A Chapin Road, Pine Brook
New Jersey 07058, United States
Tel: +1-973-618-2500
Fax: +1-973-618-2501

DN Solutions Europe
Emdener Strasse 24, D-41540
Dormagen, Germany
Tel: +49-2133-5067-100
Fax: +49-2133-5067-111

DN Solutions India
No.82, Jakkuar Village
Yelahanka Hobil, Bangalore-560064
Tel: + 91-80-2205-6900
E-mail: india@dncompany.com

DN Solutions China
Room 101,201,301, Building 39 Xinzhuan
Highway No.258 Songjiang District
China Shanghai (201612)
Tel: +86 21-5445-1155
Fax: +86 21-6405-1472

Sales inquiry
sales@dncompany.com

* For more details, please contact DN Solutions.

* Specifications and information contained within this catalogue may be changed without prior notice.

DN SOLUTIONS

ver. EN 230508 SU